PSD copy incomplete 9 of 75

PRINCIPLES OF

RAILROAD OPERATION

AND

RAILWAY SIGNALING

PREPARED BY

RESEARCH AND ENGINEERING DEPARTMENT

WABCO

UNION SWITCH & SIGNAL DIVISION

PRINCIPLES OF RAILROAD OPERATION AND RAILWAY SIGNALING

INTRODUCTION

The basic purpose of the course in Principles of Railroad Operation and Railway Signaling is to provide WABCO personnel with a background into the business of our prime customer and an introduction to the many ways we serve him. Railroading is a complex business, and we who serve the railroads are engaged in an equally complex task.

The art, technology or business of railway signaling (There are those who would call it by any one of these names) sprang from a need for safety in an industry which was growing by leaps and bounds less than 100 years ago. During the past generation, the justification for signaling became based on economics with safety. Signaling systems must not only be safe but must pay their way in the market place.

In this course, we are going to tell you what a railroad is, what it does and briefly how it does it. Then, we will set down some basic principles involved in railway signaling. Finally, we will point out the regulatory bodies which have jurisdiction over the railroads and highlight the industry trade and professional associations connected with railway signaling. From time to time during the course, reference will be made to important documents and pertinent literature of the industry.

Conducting the various classes each week will be members of Union Switch & Signal who are experts in their respective fields and have prepared the material which will be used throughout the course. In fact, those who complete this course will be exposed to approximately 400 man-years of railroad and railroad signaling experience. The old saw about "getting out as much as you put in" is certainly true of such an endeavor as this, so we urge you to come to class prepared to intelligently enter into the class work.

US&S DIV. WABCO - SWISSVALE, PA. ALL RIGHTS RESERVED

PRINCIPLES OF
RAILROAD OPERATION AND RAILWAY SIGNALING

COURSE OUTLINE

I. Purpose

A. Provide background into railroading - what it is - how it functions - various means for controlling its operations.

B. Show how signaling fits into railroad operating picture - from safety only to economic justification with safety - safety always first.

C. Indicate some basic principles of railway signaling.

D. Point out regulatory bodies, industry associations and important documents and literature.

II. The Railroad

A. What is it - what does it do - how?

B. Railroad Organization

C. Methods of Operation
   1. Time table
   2. Time table and train order
   3. The block system
      (a) Need for separation of trains (time vs. space)
      (b) Manual (also controlled - MBS)
      (c) Automatic
         (1) Double track
         (2) Single track
   4. Signal Indication
      (a) Interlocking Limits - explain
      (b) Line-of-road (CTC or TCS)

III. Evolution of Railway Signaling - See AAR-P&P-Chapter I.

A. George Westinghouse one of first to recognize need for Ry. Sig.

B. Early signals - semaphore
   1. Wire pull - hydraulic - electro - pneumatic
   2. Primarily for interlockings
   3. Some for manual block

C. Signals today
   1. Color
   2. Position
   3. Speed vs. route
   4. Aspects (see Standard Code)

D. Invention of track circuit - important — chapter III
   1. Detection of presence of train or car
   2. Provide intelligence
   3. Provide broken rail protection
   4. Provide protection against open switch
   5. Refer to many types and forms of track circuit (incl. coded)
   6. Special considerations
      (a) Foreign current
      (b) Power line and other interference
      (c) Electrified territory

E. From safety only to economy with safety — chapter IV
   1. 1 block - 2 aspect - overlap
   2. 2 block - 3 aspect - home and distance
   3. 3 block and up
   4. Signal spacing - braking distance
   5. Automatic train control and cab signals
   6. Automatic interlocking
   7. CTC

IV. Typical Signaling Applications Illustrating Various Basic Signaling Principles — chapter V

A. Automatic Block System - Double Track
   1. Intelligence channels required
   2. How obtained - 2 block - 3 block
   3. Principles involved
      (a) Battery feed opposite from relay
      (b) Closed circuit principle
      (c) Double wire vs. single wire and ground. Why?

B. Automatic Block System - Single Track
   1. Intelligence channels required
   2. Extra function of direction establishment
   3. How obtained

C. Interlocking Systems Using Mechanical Locking — chapter VI not supplied
   1. Background and development - locking (all kinds)
   2. Manual operation
   3. Power operation
   4. Illustrations

D. Interlocking Systems Using Circuit Locking — chapter VII
   1. Principal types of locking
      (a) Detector
      (b) Route
      (c) Releasing of locking
         (1) Approach
         (2) Time
         (3) Sectional

2. Automatic interlocking — chapter VIII
3. Typical main line interlocking - unit lever type
4. Typical main line interlocking - route type

E. Vital vs. Non-vital Circuits — chapter IX
1. Define vital - non-vital
2. Vital Relays
   (a) ICC requirement
   (b) Contacts
   (c) Design and manufacturing
3. Discuss need for intelligence link (non-vital)
   (a) Direct wire
   (b) Coded by relay and solid state

F. Remote Control Interlocking Systems — chapter X
1. Application - consolidation - economy
2. Bring together best of vital and non-vital circuits
3. Typical arrangement

G. Traffic Control Systems — chapter XI
1. Extension or expansion of remote control interlocking
2. The central control machine
   (a) Possibility of whole railroad control
   (b) Possibility of approach to automatic operation
   (c) Various types

H. Cab Signaling and Automatic Speed Control — chapter XII
1. What is basic reason for cab signal - train stop - speed control
2. Evolution of three systems
   (a) Train stop - cab indicator
   (b) Cab signaling
   (c) Complete speed control systems

I. Highway Crossing Protection — chapter XIII
1. Evolution and development
2. Standard protection
3. Additional features available
   (a) Gates - other signs and signals
   (b) Cut outs and restarts
   (c) Selective speed control
      (1) Conventional
      (2) Predictor
4. AFO applications - why - what - how
5. Racon

J. Total Terminal Control — chapter XIV
1. Need for controls in terminal areas - line of road speed vs. terminal time

2. What's required for TTC
   (a) Interlocking & TCS - have covered
   (b) Yard control systems
3. Yard control principles
   (a) What are objectives
   (b) How accomplished
   (c) Describe principles involved
   (d) Describe hardware involved

V. Rapid Transit Signaling — Chapter XV

A. Signal layout (time vs. distance curves)
   1. With wayside sig.
   2. With ATC
   3. With ATO

B. Interlocking
   1. With wayside sig.
   2. With ATC
   3. With ATO

C. Yard Control
   1. Manual control
   2. Remote control of all cars

D. Car Carried Equipment
   1. ATC
      (a) Cab signal
      (b) Overspeed control
   2. ATO
      (a) Speed control
      (b) Controls at stations (doors, stops, etc.)

VI. Special Communications and Control Systems — Chapter XVI

A. Railroad Communications
   1. Need for own communication systems
      (a) Train dispatching
      (b) General communications
      (c) Info/data requirements
   2. Brief history of development
   3. Systems
      (a) Wire
         (1) Telegraph
         (2) Telephone
      (b) Radio
         (1) Trainphone
         (2) Microwave systems

B. Remote Control of Vehicles — Chapter XVII
   1. Remote control vs. manual
      (a) Control of motive power
      (b) Control of brakes

2. Hardware requirements
   (a) Radio equipment
   (b) Relay equipment
   (c) Pneumatic equipment
3. Applications
   (a) Now
   (b) Future (digital systems)

C. Remote Multiple Unit Control — chapter XVIII
   1. System description
   2. How used and where

VII. Power Requirements and Protection — chapter XIX

A. Various Voltage Systems

B. Necessity for Standby Capacity

C. Today's Power Supplies (incl. electrified territory)

D. Lightning Protection

E. Fusing

VIII. Computer Use in Railroading chapter XX

A. Data Processing

B. Problem Analysis

C. Design

D. Control

E. Special Demands on Communication

IX. Regulatory Bodies and Trade Associations chapter XXI

A. Regulatory Bodies
   (1) ICC
   (2) State PUC

B. Trade Associations
   (1) AAR
   (2) RPI
   (3) Others

X. Source Material as Outside Reading
Phillips: Railroad Operation & Railway Signaling
Mimeographed material to be furnished
AAR: Standard Code
Principles and Practices - Chapter I
ICC: Rules, Standards and Instructions

PRINCIPLES OF RAILROAD OPERATION AND RAILWAY SIGNALING

CHAPTER I - THE RAILROAD

What It Is

A railroad is a form of transportation where people and/or materials are transported in cars having steel wheels on a support and guidance system consisting of steel rails.

The Interstate Commerce Commission designates railroads for statistical purposes, by Class. Class I railroads are those with operating revenues of $5,000,000 or more, and others are Class II railroads (a railroad that performs trunk or main line common-carried transportation service) or switching and terminal railroads (local switching railroads, industrial railroads, port railroads, stockyard railroads, bridge and ferry companies, union station companies, and various other local railway companies not engaged in line-haul operations). At the beginning of 1965, there were 576 railroad operating companies. Of these, 76 were Class I line-haul railroads and 500 were Class II railroads and switching and terminal companies.

Railroads are also defined as common carriers or not. A common carrier railroad provides the general public with transportation service for compensation and is required to carry all goods offered when accommodations are available, and when the fixed price for such service is tendered. The service and rates of common carrier railroads are regulated by the Interstate Commerce Commission.

What Does It Do

Today's railroads provide terminals to ticket, feed and shelter, leaving and arriving long-haul and commuter passengers. Railroads provide the transportation facilities required to deliver a passenger from leaving point to destination point according to predetermined schedules.

Railroads provide on the "head-end" of passenger trains mail, express and baggage service at the same fast schedules as passenger trains.

Railroads provide shipment of freight in car-load lots. This involves delivery to the shipper of an empty car, pick-up of the loaded car at the shipper's site and delivery of the loaded car to the destination point.

Railroads provide shipment of freight in "less than carload"

 ALL RIGHTS RESERVED

lots. Such shipments - called L.C.L. - are picked up at a shipper's site and delivered to a freight terminal for inclusion with other L.C.L. freight and routed to the final destination point where it is distributed by truck.

Railroads provide a new type service called "piggyback" service. Piggyback is a popular name for the inter-city transportation of motor-truck trailers on specially equipped railway flatcars. This service is provided at fast passenger train schedules.

Another new type of service provided by railroads is unit-train service. One example of unit-train service is a complete train of loaded coal-cars (up to 150 cars) picked up at the mine and delivered to destination point. These trains are handled as unit and no time is lost in switching or terminal operations while the train is enroute.

Railroads are providing more and more specialized cars to handle the unusual materials requiring shipment. A part of this growing transportation business is the railroad's ability to handle extra large and extra heavy items.

The railroads provide transportation services by maintaining 372,300 miles of track, 192,000 railroad bridges, 1,400 railroad tunnels, 30, 296 locomotives, 23,147 passenger cars, 10,539 mail, baggage and express cars, 1,816,519 freight cars, 696,000 employees, and a gross investment of $36,128,794,000.

Railroad Organization

Each railroad company shapes its organization to fit its particular requirements. A small railroad may have a very simple departmental setup. A large railroad company, with many thousands of employees and doing a business of many millions of dollars annually, has a much more extensive organization, with several major departments and many minor departments, divisions and bureaus.

Generally speaking, the railroad organization is grouped in nine major departments - Executive, Operating, Engineering and Maintenance of Way, Mechanical, Traffic, Law, Treasury, Accounting, and Purchasing and Stores. On some large railroads the Engineering and Maintenance and Mechanical Departments are branches of the Operating Department.

The Executive Department is headed by the President and includes his staff of assistants. Generally, the president is the responsible head of the railroad organization. He is accountable to the Board of Directors and to the stockholders for the property and its efficient operation.

US&S DIV. WABCO - SWISSVALE, PA. ALL RIGHTS RESERVED

I

The Operating Department, usually headed by a Vice President or General Manager, is, with respect to the number of persons employed, the largest department of a railroad. This department operates the trains, the yards, the freight and passenger stations, and usually attends to the maintenance of the railroad plant. The three branches of the Operating Department are as follows: the Transportation Department which operates trains, yards and stations; the Mechanical Department which is concerned with the construction, repair, inspection and servicing of locomotives, cars, floating equipment, and work equipment, and the operation of shops, engine houses, and other mechanical facilities; the Engineering Department which has the responsibility of construction and maintenance of tracks, bridges, trestles, tunnels, shops, storehouses, signals, fences, stations, and other fixed properties.

The Traffic Department, headed by a Vice President or Chief Traffic Officer, is the "sales department" of the railroad, having charge of the procurement of freight and passenger business. The department is usually divided into two sections, one dealing with freight matters and the other dealing with passenger matters.

The Law Department, headed by a Vice President or a General Counsel, is responsible for the proper handling of all matters in which special knowledge of law is required. It not only handles matters before courts, state railroad commissions, the Interstate Commerce Commission and legislative committees, but also all other legal matters such as the drafting of contracts, agreements, deeds and other documents.

The Accounting Department, headed by a Vice President, Comptroller, or a General Auditor, performs the vast accounting work required in connection with railroad operations. The auditing of department and station accounts, bills, vouchers and payrolls, the compilation of statistics, and the preparation of statistical and financial reports are among its numerous duties.

The Treasury Department, headed by the Treasurer of the Company, receives and disburses money, checks, and vouchers, issues or approves checks and vouchers, attends to the banking, issues pay checks, pays dividends on the company's stock and interest on its bonds, and performs other duties having to do with railroad financial affairs.

The Purchasing and Stores Department does the buying and handles the storage and distribution of materials and supplies for the railroad. This department is usually headed by a Vice President or a Purchasing Agent.

Figure 1 shows a typical organizational chart for a Class I railroad with approximately 10,000 miles of track.

US&S DIV. WABCO - SWISSVALE, PA. ALL RIGHTS RESERVED

I

FIGURE 1.

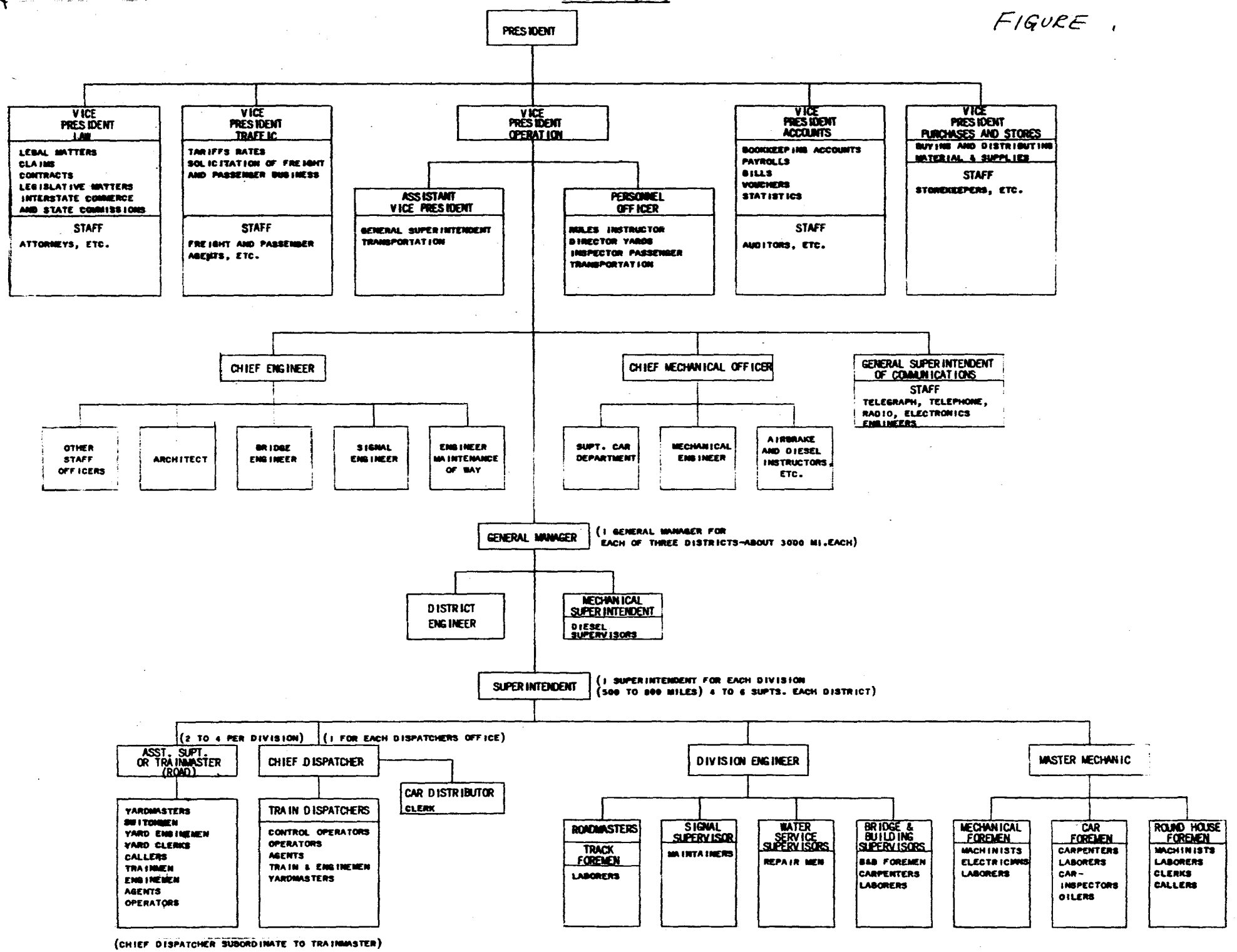
ORGANIZATION OF A RAILROAD (10,000 MILES)
BOARD OF DIRECTORS
PRESIDENT
VICE PRESIDENT LAW
LEGAL MATTERS
CLAIMS
CONTRACTS
LEGISLATIVE MATTERS
INTERSTATE COMMERCE AND STATE COMMISSIONS
STAFF
ATTORNEYS, ETC.
VICE PRESIDENT TRAFFIC
TARIFFS RATES
SOLICITATION OF FREIGHT AND PASSENGER BUSINESS
STAFF
FREIGHT AND PASSENGER AGENTS, ETC.
VICE PRESIDENT OPERATION
ASSISTANT VICE PRESIDENT
GENERAL SUPERINTENDENT TRANSPORTATION
PERSONNEL OFFICER
RULES INSTRUCTOR
DIRECTOR YARDS
INSPECTOR PASSENGER TRANSPORTATION
VICE PRESIDENT ACCOUNTS
BOOKKEEPING ACCOUNTS
PAYROLLS
BILLS
VOUCHERS
STATISTICS
STAFF
AUDITORS, ETC.
VICE PRESIDENT PURCHASES AND STORES
BUYING AND DISTRIBUTING MATERIAL & SUPPLIES
STAFF
STOREKEEPERS, ETC.
CHIEF ENGINEER
OTHER STAFF OFFICERS
ARCHITECT
BRIDGE ENGINEER
SIGNAL ENGINEER
ENGINEER MAINTENANCE OF WAY
CHIEF MECHANICAL OFFICER
SUPT. CAR DEPARTMENT
MECHANICAL ENGINEER
AIRBRAKE AND DIESEL INSTRUCTORS, ETC.
GENERAL SUPERINTENDENT OF COMMUNICATIONS
STAFF
TELEGRAPH, TELEPHONE, RADIO, ELECTRONICS ENGINEERS
GENERAL MANAGER
(1 GENERAL MANAGER FOR EACH OF THREE DISTRICTS-ABOUT 3000 MI.EACH)
DISTRICT ENGINEER
MECHANICAL SUPERINTENDENT
DIESEL SUPERVISORS
SUPERINTENDENT
(1 SUPERINTENDENT FOR EACH DIVISION (500 TO 800 MILES) 4 TO 6 SUPTS. EACH DISTRICT)
(2 TO 4 PER DIVISION)
(1 FOR EACH DISPATCHERS OFFICE)
ASST. SUPT. OR TRAINMASTER (ROAD)
YARDMASTERS
SWITCHMEN
YARD ENGINEMEN
YARD CLERKS
CALLERS
TRAINMEN
ENGINEMEN
AGENTS
OPERATORS
CHIEF DISPATCHER
TRAIN DISPATCHERS
CONTROL OPERATORS
OPERATORS
AGENTS
TRAIN & ENGINEMEN
YARDMASTERS
CAR DISTRIBUTOR CLERK
(CHIEF DISPATCHER SUBORDINATE TO TRAINMASTER)
DIVISION ENGINEER
ROADMASTERS
TRACK FOREMEN
LABORERS
SIGNAL SUPERVISOR
MAINTAINERS
WATER SERVICE SUPERVISORS
REPAIR MEN
BRIDGE & BUILDING SUPERVISORS
B&B FOREMEN
CARPENTERS
LABORERS
MASTER MECHANIC
MECHANICAL FOREMEN
MACHINISTS
ELECTRICIANS
LABORERS
CAR FOREMEN
CARPENTERS
LABORERS
CAR-INSPECTORS
OILERS
ROUND HOUSE FOREMEN
MACHINISTS
LABORERS
CLERKS
CALLERS

Methods of Train Operations

The two basic methods of train operation are time-table and train order system and operation by signal indication.

Time-Table and Train Order Operation

This method of directing trains is a time interval method and provides authority for the movement of regular trains subject to rules. Means have to be provided to meet opposing trains and to permit faster trains and superior trains to pass. It is also necessary to devise methods to effect these opposing and passing movements without disaster and with a minimum of confusion and delay. The answer is found by arranging for the train movements by time schedules so that the meeting and passing of trains can be pre-arranged. The time-table constitutes the first system utilized for spacing of trains. In this system each train is given definite superiority which has to be respected by all other inferior trains and a schedule is issued by means of which each train crew is notified as to the time of arrival and departure of their train and other trains at specific points. The time-table or schedule system of railroad operation is a time interval system providing for trains to be at the same place at different times. However, the time-table is not just a "schedule", it incorporates many instructions governing operation of trains over the specific territory to which it applies and makes reference to the various methods of operation and the standard rules that will govern.

With the time-table or schedule system of railroad operation, no signal system is involved.

It is apparent that operation under a pre-arranged time schedule admits no flexibility and that delays and detentions to traffic could be severe and cumulative. Therefore, the operation by time schedule is augmented by the written train order which upon issuance has the effect of modifying the pre-arranged time schedule. The issuance of "train orders" offers a ready means of eliminating many of the deficiencies of the time-table operation. The use of the train order system usually, but not necessarily, requires the use of a signal in the form of either a semaphore, light or flag to indicate orders are to be delivered. This was one of the first uses of signals in railroad operation.

Time-table and train order or time interval system of operation has the basic weakness that safe train operation is dependent upon train crews obeying their instructions and upon the dispatchers and operators not issuing conflicting orders.

Manual block systems are used to provide added safety in train operations. The railroad is divided into blocks defined by block signals and trains are separated by space in addition to time interval. The basic operation under the Manual Block Signal System

US&S DIV. WABCO - SWISSVALE, PA. ALL RIGHTS RESERVED

is still by time-table and train order with the block signals used to provide increased safety of operation. After the advent of the track circuit, block signal systems became widely used.

Automatic block signals are used with time-table and train order operation to provide increased safety of operation. Again, the basic operation is still by time interval with safe train movements enforced by space separation.

Operation by Signal Indication

The operation of trains through interlocking limits was the first use of signals whose aspects superseded the superiority of trains. The rules applying to operation through interlocking limits appear in "Standard Code of Operating Rules" starting on page 106.

Later automatic block signals were used to operate trains by signal indication. The combined use of interlocking and automatic block signals to govern train movements by signal indication became known as traffic control systems.

Operation by signal indication combines the safety of separating trains by space and the flexibility of the train order system by allowing the dispatcher to display his instructions to trains by signals instead of the slow process of written instructions to crews.

US&S DIV. WABCO - SWISSVALE, PA. ALL RIGHTS RESERVED

SOUTHWARD

RICHMOND SUB-DIVISION

SECOND CLASS			FIRST CLASS									TIME TABLE No. 3 April 29, 1956		CAPACITY TRACKS	
97	89	85	57	33	7	21	3	27	75	9	5				
Through Freight Daily P. M.	The Tar Heel Daily P. M.	Through Freight Daily A. M.	Silver Meteor Daily P. M.	Silver Comet Daily P. M.	The Sunland Daily P. M.	Silver Star Daily P. M.	Passenger Mail and Express Daily A. M.	The Capitol Daily A. M.	The Merchandiser Daily A. M.	The Palmland Daily A. M.	Passenger Mail and Express Daily A. M.	STATIONS		Sidings	Other
11.05	5.35		9.20	7.25	6.00	4.05	11.50	10.00	8.00	2.30	12.30	LV HERMITAGE 3.3	Y		Yard
11.15	5.50		9.26	7.31	6.06	4.11	11.56	10.10	8.10	2.36	12.36	BROWN ST. 0.8	O		Yard
11.25			9.33	s 7.40	s 6.10 6.25	s 4.18	s11.59 12.20	10.11	8.11	s 2.40 2.55	s12.40 1.10	RICHMOND 2.0	X SOU	54	
							12.23	10.14	8.14			SOUTH YARD 8.8		231	Yard
												BELLWOOD 4.4	Y		Yard
							12.33	10.26	8.26			CHESTER 5.7		85	7
												LYNCH 4.2		156	
12.27	6.40		10.00	8.07	s 6.55	4.46	s12.58	10.38	8.38	s 3.30	s 1.56	PETERSBURG 4.8		129	Yard
												RYAN 3.8		142	92
												BURGESS 6.4		89	5
							f 1.13	10.58	8.58			DINWIDDIE 4.3		77	41
							f 1.18					DE WITT SIDING 5.8		155	30
							s 1.23				f 2.21	McKENNEY 4.8		86	92
							f 1.28	11.15	9.15			RAWLINGS 4.9		107	10
							f 1.33					WARFIELD 4.0		155	22
							s 1.38	11.26	9.26		f 2.34	ALBERTA 2.8	Y	90N 98S	125
							f 1.42					COCHRAN 3.8		78	10
												GRANDY 6.2		156	35
								11.45	9.45			SKELTON 5.0		104N 104S	16
							s 2.00				s 2.59	LA CROSSE 5.7	X A&D	91	20
							f 2.07	12.05	10.05			HAGOOD 6.3		155N 155S	8
												PASCHALL 3.9		94N 94S	22
							f 2.17					WISE 3.5		104	8
3.00	8.47	2.20	11.11	9.20	s 8.20	5.57	s 2.30	12.25	10.25	f 4.58	s 3.35	NORLINA 8.1	O Y	94	Yard
							2.37	12.35	10.35			MIDDLEBURG 3.3		96N 96S	11
												GREYSTONE 4.0	O	128	250
3.43	9.30	2.50	11.26	9.36	s 8.38	6.12	s 2.53	12.50	10.50	s 5.16	s 3.57	HENDERSON 4.5	Y	155N 97S	Yard
												QILL 3.5		85	5
							3.01					KITTRELL 8.5		104N 104S	9
					8.53		s 3.09	1.13	11.13	5.32	4.12	FRANKLINTON 6.2		154N 95S	Yard
							f 3.19					YOUNGSVILLE 4.0		106	40
					9.05		s 3.27	1.28	11.28	5.42	4.25	WAKE FOREST 14.3		110N 104S	45
												EDGETON 1.3	X NS		
4.50 A. M. Daily 97	10.45 P. M. Daily 89	4.05 A. M. Daily 85	s12.15 A. M. Daily 57	s10.20 P. M. Daily 33	s 9.30 P. M. Daily 7	s 6.53 P. M. Daily 21	s 3.55 P. M. Daily 3	1.45 P. M. Daily 27	11.45 A. M. Daily 75	s 6.05 A. M. Daily 9	s 5.00 A. M. Daily 5	AR RALEIGH	O Y	37	Yard

I

RICHMOND SUB-DIVISION

NORTHWARD

TIME TABLE No. 3

April 29, 1956

Distance from Richmond	Station Numbers		STATIONS		FIRST CLASS 58 Silver Meteor Daily A. M.	6 Passenger Mail and Express Daily A. M.	34 Silver Comet Daily A. M.	22 Silver Star Daily A. M.	8 The Sunland Daily A. M.	4 Passenger Mail and Express Daily P. M.	10 The Palmland Daily A. M.			SECOND CLASS 80 The Marketer Daily A. M.	280 Through Freight Daily P. M.	82 The Courier Daily P. M.	88 The Iron Master Daily P. M.
3.9	04	2 Tracks	HERMITAGE	T AR	3.45		6.30	6.55	11.15		1.50			5.45	2.00		10.00
			3.3														
0.6	01	2 Tracks	BROWN ST.	O	3.36		6.21	6.46	11.06		1.36			5.11	1.26		9.42
			0.6														
0.0	0		RICHMOND	X SOU	3.35	s 5.10	s 6.20	s 6.45	11.05 s10.40	s 3.40	1.35 s 1.00			5.09	1.24		9.37
			2.0														
2.0	2	2 Tracks	SOUTH YARD						10.32	3.37				5.05	1.20		9.32
			6.6														
8.6	8	2 Tracks	BELLWOOD	Y										4.56	1.11		
			4.4														
13.0	13		CHESTER						10.20	f 3.24							
			5.7														
18.7	19		LYNCH														
			4.2														
22.9	23		PETERSBURG		3.00	s 4.35	5.50	6.10	s10.10	s 3.13	s12.20			4.37	12.52		8.55
			4.6														
27.5	28		RYAN						10.02								
			3.6														
31.1	31		BURGESS											4.23	12.38		
			6.4														
37.5	38		DINWIDDIE						9.53	f 2.43							
			4.3														
41.8	42		DE WITT SIDING							f 2.38				4.08	12.23		
			5.8														
47.6	48		McKENNEY			f 4.00			9.43	s 2.31							
			4.0														
52.2	52		RAWLINGS							f 2.23				3.43	11.58		
			4.9														
57.1	57		WARFIELD						9.35	f 2.17							
			4.0														
61.1	61		ALBERTA	Y		f 3.45				s 2.11				3.31	11.46		
			2.8														
63.9	64		COCHRAN			f 3.42				f 2.04							
			3.9														
67.8	68		GRANDY						9.24								
			5.7														
73.5	74		SKELTON							1.52				3.12	11.27		
			5.5														
79.0	79		LA CROSSE	X A&D		s 3.23			9.13	s 1.40	s11.03						
			4.7														
83.7	84		HAGOOD							f 1.36				2.55	11.10		
			7.3														
91.0	91		PASCHALL						9.02	f 1.27							
			3.9														
94.9	95		WISE							f 1.20							
			3.5														
98.4	98	2 Tracks	NORLINA	O Y	1.42	s 3.05	4.33	4.52	s 8.55	s 1.15	s10.45			2.35	10.50	1.35	6.33
			8.1														
106.5	107	2 Tracks	MIDDLEBURG							12.55				2.20	10.35	1.17	
			3.3														
109.8	110		GREYSTONE	O													
			4.0														
113.8	114		HENDERSON	Y	1.28	s 2.28	4.16	4.32	s 8.21	s12.45	s10.21			2.05	10.20	1.04	5.59
			4.5														
118.3	118		GILL														
			3.5														
121.8	122		KITTRELL							12.28				1.52	10.07	12.51	
			8.5														
130.3	130		FRANKLINTON			2.06			8.02	s12.21	9.57			1.39	9.54	12.40	
			6.2														
136.5	137		YOUNGSVILLE							f12.10							
			4.0														
140.5	141	2 Tracks	WAKE FOREST			1.56			7.52	s12.04	9.47			1.23	9.38	12.25	
			14.3														
154.8	155	2 Tracks	EDGETON	X NS													
			1.3														
156.1	156	2 Tracks	RALEIGH	O T LV	12.45	1.40	3.35	3.50	7.35	11.40	9.30			12.55	9.10	12.01	4.45
					A. M. Daily 58	A. M. Daily 6	A. M. Daily 34	A. M. Daily 22	A. M. Daily 8	A. M. Daily 4	P. M. Daily 10			A. M. Daily 80	A. M. Daily 280	P. M. Daily 82	P. M. Daily 88

I

Richmond Sub-Division

C 1—All trains obtain Clearance Card before leaving Norlina. First class trains, except Nos. 27 and 75, obtain Clearance Card before leaving Richmond.

C 2—The time of northward first class trains at Hermitage applies at second crossover north of Hermitage yard office.

The time of southward first class trains and all second and inferior class trains at Hermitage applies at north end two tracks.

The time of trains at Brown Street applies at yard office.

The time of Richmond Sub-Division trains at Bellwood applies at Telegraph Office.

The time of first class trains at Raleigh applies at Passenger Station.

C 3—Trains will stop on signal as follows:

Nos. 3 and 4 at Bracey and Manson.

No. 3 at Paschall and Neuse to exchange parcel post and perishable express.

Nos. 3 and 4 at Millbrook to exchange parcel post mail.

No. 5 at Franklinton and Wake Forest to discharge passengers from Petersburg, and points north and stations on Portsmouth Sub-Division and to receive passengers for Raleigh and beyond.

No. 6 at Wake Forest and Franklinton to discharge passengers from Raleigh and south and receive passengers for Norlina and beyond in both directions north and east.

Nos. 7 and 8 at Wake Forest to discharge and receive passengers from and for Washington, Athens, Savannah and beyond; also from stations on Portsmouth line at which train 17 stops for passengers.

Nos. 9 and 10 at Franklinton and Wake Forest to discharge and receive passengers from and for Richmond, Savannah and beyond.

Nos. 21 and 22 at Petersburg to receive and discharge passengers for and from Columbia and beyond where trains are scheduled to stop, and No. 22 at Norlina to discharge passengers from Hamlet and beyond for points on Portsmouth Sub-Division where No. 18 is scheduled to stop.

No. 57 at Richmond and Petersburg to receive passengers for Columbia and beyond where train is scheduled to stop.

No. 58 at Petersburg and Richmond to discharge passengers from Columbia and beyond.

Nos. 33 and 34 at Henderson to discharge and receive passengers from and for Washington and beyond and at Petersburg to receive and discharge passengers for and from Monroe and beyond.

REGISTERING STATIONS

C 4—Hermitage, Brown Street, Richmond, Norlina and Raleigh.

All trains will register at Hermitage, Brown Street, Norlina and Raleigh. First class trains only, except Nos. 27 and 75, will register at Richmond for information of first class trains. First class trains will register by ticket, Form 405, at Hermitage, Brown Street, Norlina and Raleigh. Second class and inferior trains will register by ticket, Form 405, at Brown Street and Norlina.

BULLETIN BOOKS

C 5—Hermitage, Brown Street, Richmond, Petersburg, Norlina, Henderson and Raleigh Yard and Roundhouse.

STANDARD CLOCKS

C 6—Hermitage, Richmond, Petersburg, Norlina, Henderson, Raleigh Yard and Roundhouse.

YARD LIMITS

C 7—Hermitage, Brown Street, Richmond, South Yard, Petersburg, Alberta, Norlina, Henderson, Franklinton and Raleigh.

FUELING STATIONS

C 8—Hermitage, Petersburg, Norlina, Henderson and Raleigh.

WATER STATIONS

C 9—Hermitage, Richmond (Brown Street), Petersburg, Norlina, Henderson and Raleigh.

SPEED RESTRICTIONS

C 10—Maximum speed of passenger and express trains, see page 18.

Maximum speed of freight and mixed trains, 60 M. P. H., except as below specified:

20 M. P. H. between Hermitage and south switch Brown Street Yard.

10 M. P. H. between south switch Brown Street Yard and north bank of James River, M. P. 0.3.

15 M. P. H. between M. P. 0.3 and M. P. 1.0.
45 M. P. H. between M. P. 2.7 and M. P. 3.9 northward track.
55 M. P. H. between M. P. 19.6 and M. P. 20.1.
40 M. P. H. between M. P. 20.1 and M. P. 20.7.
40 M. P. H. between M. P. 21.7 and M. P. 22.3.
25 M. P. H. between M. P. 22.3 and M. P. 23.1.
40 M. P. H. between M. P. 23.1 and M. P. 25.0.
55 M. P. H. between M. P. 37.3 and M. P. 39.2.
50 M. P. H. between M. P. 63.9 and M. P. 66.0.
50 M. P. H. between M. P. 67.1 and M. P. 72.9.
55 M. P. H. between M. P. 74.3 and M. P. 75.0.
35 M. P. H. between M. P. 78.9 and M. P. 79.1.
50 M. P. H. between M. P. 86.2 and M. P. 87.1.
25 M. P. H. between M. P. 98.3 and M. P. 98.7.
40 M. P. H. between M. P. 98.7 and M. P. 99.0 both tracks.
45 M. P. H. through turnout end two tracks, M. P. 103.7.
45 M. P. H. between M. P. 113.3 and M. P. 114.2.
45 M. P. H. between M. P. 140.5 and M. P. 140.9.
45 M. P. H. through turnout end two tracks, M. P. 147.7.
45 M. P. H. through turnout end two tracks, M. P. 154.0.
20 M. P. H. through turnout southward track, M. P. 154.9.
10 M. P. H. passing over turnouts when entering or leaving north end Raleigh Yard, M. P. 154.9.
45 M. P. H. between M. P. 154.5 and M. P. 155.9 northward track.
20 M. P. H. between M. P. 155.9 and M. P. 156.1 northward track.
45 M. P. H. between M. P. 154.5 and M. P. 155.3 southward track.
20 M. P. H. between M. P. 155.3 and M. P. 156.1 southward track.
10 M. P. H. between north and south ends, Raleigh Passenger landing.
10 M. P. H. through turnout north end siding Raleigh Yard, M. P. 155.9.
10 M. P. H. through crossover, Raleigh Yard, M. P. 156.0.
10 M. P. H. through turnout south end freight lead, Harrington Street, Raleigh, M. P. 156.7.
10 M. P. H. through crossover Harrington Street, Raleigh, M. P. 156.8.
25 M. P. H. through other crossovers equipped with power operated switches.

Trains and engines moving in track serving or leading to Quartermaster General Depot, Bellwood, 15 M. P. H.

Trains handling steam derrick, 35 M. P. H.

Trains handling scale test cars, 25 M. P. H.

Speed restrictions will be observed through stations as follows to comply with City Ordinances.

Richmond, 6 M. P. H. when moving longitudinally in a street.

Petersburg, 6 M. P. H.

La Crosse, 20 M. P. H. over Highway 58 and first and second crossings south of station.

Henderson, 30 M. P. H.

Franklinton, 10 M. P. H.

(Continued on next page)

I

RAILROAD CROSSINGS

C 11—Railroad crossings at grade protected by interlockings:
Edgeton, M. P. 154.8, N. S., Unattended, Rule 98.

C 12—Railroad crossings at grade protected by electrically locked derails:
Rocketts, M. P. 0.7, Southern, Normal clear for S. A. L., Rule 98.
LaCrosse, M. P. 78.9, A. & D., Normal clear for S. A. L., Rule 98.

INTERLOCKINGS

C 13—Interlockings at other than railroad crossings and drawbridges:
Brown Street, Unattended.
Richmond, Main Street Station, Attended.
Raleigh Yard Office, M. P. 155.9, Unattended.
Raleigh, Harrington Street, M. P. 156.6, Unattended.
Raleigh, Morgan Street, M. P. 157.0, Unattended.

SPRING SWITCHES

C 14—Norlina, south end long lead, 25 M. P. H.

BLOCK SIGNAL SYSTEM

C 15—Traffic Control system is in service between north end crossover, Brown Street, M. P. 0.8 (north) and Signals 1570, S-1570 at Morgan Street, Raleigh, M. P. 157.0.

SIGNALLED SIDINGS

C 16—Richmond.
South Yard.
Lynch.
Dinwiddie.
De Witt Siding.
Warfield.
Grandy.
Hagood, northward and southward sidings.
Henderson, northward siding.
Franklinton, northward siding.

TWO TRACKS

C 17—TWO TRACKS EXTEND BETWEEN HERMITAGE, M. P. 3.9 NORTH, AND BROWN STREET, M. P. 0.5 NORTH; BETWEEN M. P. 2.7 AND M. P. 3.9; BETWEEN M. P. 98.7 AND M. P. 103.6; BETWEEN M. P. 147.7 AND M. P. 154.0; BETWEEN M. P. 154.9 AND M. P. 157.0.

— SPECIAL RULES —

FOR MOVEMENT BETWEEN BROWN STREET AND HERMITAGE ON NORTHWARD AND SOUTHWARD TRACKS

C 18—Absolute Block is established on northward and southward tracks with limits between "Absolute Block Limit" board located 1,150 feet north of Seventh Street, M. P. 1.6 (north), and "Absolute Block Limit" board located 1,900 feet south of Telegraph Office, Hermitage.

Operators at Brown Street and Hermitage will authorise movements on northward and southward tracks when moving with the current of traffic within the absolute block limits, issuing Special Block Card, Form 255-A. Oral authority may be obtained from the operator to use the block from intermediate points.

No train or engine will be permitted to enter the absolute block limits on either track when block on track to be used is occupied by another train or engine.

Northward inferior trains and engines authorised to use the absolute block may run ahead of superior trains from Brown Street to the north end of main track, Hermitage.

Southward inferior trains and engines authorised to use the absolute block may run ahead of superior trains from Hermitage to Brown Street.

These rules do not relieve crews of trains and engines from observance of Rules 93 and 99.

First class trains will approach and move between "Absolute Block Limit" board located 1,900 feet south of Hermitage Telegraph Office, and north end of main track, Hermitage, expecting to find trains occupying main track between these points and must know that switches are in proper position and track clear before proceeding.

First class trains will approach and move between "Absolute Block Limit" board located 1,150 feet north of Seventh Street, M. P. 1.6 (north), and Telegraph Office, Brown Street, prepared to stop within the range of vision.

Second class, inferior trains and engines moving on Special Block Card must promptly report to operator when they have cleared "Absolute Block Limit."

FOR MOVEMENT ON No. 3 TRACK BETWEEN BROWN STREET AND HERMITAGE

C 19—A running track designated as No. 3 track extends between M. P. 3.9 (north) and M. P. 0.8 (north) on east side of northward track between Hermitage and Brown Street.

Boards reading "Limit Absolute Block No. 3 Track" are located at M. P. 3.4 (north), 225 feet south of Hermitage Road, and M. P. 1.8 (north), 440 feet north of St. James Street.

Movement of trains or engines within the absolute block limits will be authorized by Special Block Card endorsed "No. 3 Track," obtained from operators at Brown Street or Hermitage. Oral authority may be obtained from the operator to use the block from intermediate points.

First class trains will not use No. 3 track unless authorised by train order.

Trains or engines receiving Special Block Card endorsed "No. 3 Track" must use No. 3 track.

All movements on No. 3 track must be made at yard speed. A maximum speed of 20 M. P. H. must not be exceeded while moving on this track.

— — — —

C 20—R. F. & P. engines assigned to handle northward S. A. L. passenger trains from Hermitage will have right of track over train of which engine is assigned between "AY" Tower and point on old S. A. L. main track at which S. A. L. and R. F. & P. engines change.

Such engines will move prepared to stop short of any obstruction and know that switches connected with this track are properly adjusted.

C 21—S. A. L. yard engines using R. F. & P. tracks at Acca in connection with interchange of freight cars or any other switching movements will move at yard speed.

Engines or trains moving out of track must not foul clearance point until switch is properly lined for their movements.

C 22—A member of crew must precede all movements of yard engines over street crossings in South Richmond.

C 23—Within city limits of Richmond, Henderson, Kittrell and Youngsville, engine whistle must not be sounded except in case of emergency, but necessary warning signals must be given by the use of the engine bell.

C 24—All trains and engines will flag across road crossing east of Sanford Mills and across Spring Street when using Sou. Ry. connection at Henderson.

C 25—City ordinance of Henderson provides that after passing over street crossings with one train another train, engine or car shall not occupy the crossing within 3 minutes after passage of the first train.

C 26—Trains working Royal Cotton Mill at Wake Forest, and handling one or more cars, must do so with air coupled, brakes tested and know that brakes are operative.

I

PRINCIPLES OF RAILROAD OPERATION AND RAILWAY SIGNALING

CHAPTER II - EVOLUTION OF RAILWAY SIGNALING

Need for Signals

George Westinghouse, the founder of the Westinghouse Air Brake Company and the Union Switch and Signal Company, invented the air brake and was the motivating force behind the beginning of railroad signaling in this country. It was his genius which first realized that although stopping a speeding train was basic to railroading it was also of paramount importance to know when to stop. Consequently, he turned his inventive know-how to signaling.

Function of Signals

In discussing signals, light or other types, it is well to first have an understanding of their function in Railway Signaling. The simplest analogy is that of the telephone receiver, with the signal occupying the same position in the signal system as does the receiver in the telephone system. It is the function of the signal to deliver visually to the engineman in the locomotive cab information which has been obtained from the track circuit and analyzed by the signal system. Thus, the ultimate success or failure of any signal system is dependent upon the manner in which the signal, through its various aspects, delivers information to the engineman. If the signal range is short, if the colors are poor, or if the aspects are confused through external interference, trains must slow down and many of the advantages of modern systems are lost. Improvements in the railway signal have kept abreast of improvements in train operation and in signal systems. Frequently, these latter improvements were made possible because better signals had been developed.

Early Signals

The first railway signal came into being shortly after the first train and actually was a signal against the train rather than for it. It consisted of a red flag carried by a man on horseback who rode ahead of the train to warn of its approach and to shoo cattle or other ambulant obstructions from the track. The first signal actually used by trains is still remembered today in the slang term for proceed. It was the "High Ball" signal and consisted of a round black ball, 8" to 12" in diameter, suspended by a rope through a pulley fastened to a high pole. With the ball at the bottom of the pole, or a "low ball", the train must stop. The ball at the top of the pole, or a "high ball", meant that the track was clear so far as the station man knew and the train could proceed. Due to the poor communications of the day, the information given by these signals often was unreliable.

US&S DIV. WABCO - SWISSVALE, PA. ALL RIGHTS RESERVED

The next step in railway signaling was to substitute a blade or paddle, operated by a lever and rod or wire, for the ball. This was the first semaphore signal and probably was an outgrowth of the semaphore system of signaling developed in France for the transmission of messages. Stop indication was provided by the blade in a horizontal position simulating a bar or gate across the track and the proceed indication by the blade hanging vertically simulating an open gate.

All signals were mechanically operated by a station man under manual block systems until the invention of the track circuit and the motor-driven semaphore signal. Included in motor-driven signals is also the electric-pneumatic semaphore signal, powered by compressed air which was controlled in turn by electrically operated valves. These two inventions were the first great strides made in signaling, as they speeded up train operation, making possible the automatic block signal system operated by the train itself, and the elimination of the rule which required the engineman to see the operator clear his manual block signal.

In the early days of railroads, trains operated only in daylight and laid up for the night. Since there was usually only one train on the line at a time, day signals were all that was needed. As track conditions improved, as the right-of-ways were fenced, and as public confidence in trains increased, trains began to operate twenty-four hours a day. With night operation, night signals became necessary and were first provided by means of a white lantern attached to the ball of the "High Ball" signal. It is readily apparent that an interpretation of the indication depended upon the engineman's judgement of the height of the light. Error was introduced by both distance from the signal and by the degree of darkness. This was recognized, and the stop indication was changed to a red light, red being the universal color signifying danger. Signals were displayed by hanging properly colored lanterns outside the stations.

With the advent of semaphore signals, the first night signal strictly for railroads was designed. This consisted of a cast iron or sheet metal frame or spectacle attached to the hub of the semaphore blade and moving with it. Panes or pieces of clear and red glass were fastened into holes in this frame. An oil lamp was located behind the frame in such a position that with the blade in the horizontal position its light shown through the red glass and with the blade hanging in the vertical position its light shown through the clear glass.

Light Signals

Subsequent to the invention of the incandescent electric lamp, light signals for both night and day indications came into limited

US&S DIV. WABCO - SWISSVALE, PA. ALL RIGHTS RESERVED

use in tunnels and subways where semaphore signals could not be seen. These early light signals were merely electric lamps located behind colored glass filters, and had very short range. After the introduction of the track circuit and motor-driven semaphore signals, electric lamps began to replace the oil lamps on such signals and gradually supplanted them.

From the limited early use of light signals, it was soon recognized that their use offered a distinct advantage over the semaphore signal. Not only did they solve the problem of uniform day and night signaling, but they also required no moving parts other than the relays controlling the lamps. On the other hand, the semaphore signal, being in essence a mechanically operated device, required considerable material and labor to maintain.

The first light signals which could be classed as long range ones were produced by substituting a colored lens for the plain glass filter. This produced a concentrated beam which was, however, not made up of absolutely parallel rays. The lamps used were commercial with large irregular filaments. Improved techniques in lamp manufacture opened the way for the development of smaller more concentrated filaments of higher wattage. This in turn produced longer range beams which were practically parallel.

The ultimate range of the beam and the efficiency of the optical system is limited by the angle of acceptance, or the cone of light from the focal point to the rim of the lens. Single lenses have relatively long focal lengths and small angles of acceptance. To increase this angle and thus strengthen the beam, doublet lens combinations were introduced. Combining two matched lenses results in a focal length, for the combination, which is much less than the focal length of either single lens, with a much greater angle of acceptance. Since theoretically the candlepower of a lens or lens combination varies directly with the square of its diameter, further increase in range was accomplished by increasing the diameter of the lens unit. An 8-3/8" diameter lens combination was finally adopted for most long range signals as being the most efficient for economical application.

Colors

The colors used in light signals have progressed through several changes along with the improvements in train speeds and operation and the increase in traffic. The two-color system continued for a good many years until the introduction of three-aspect signaling demanded a third color for the caution aspect. Green was chosen, and the combination of clear for proceed, green for caution, and red for stop became standard for years. However, as the usage of electric lamps in homes, businesses, cars, etc., increased, a problem arose in connection with the proceed aspect.

US&S DIV. WABCO - SWISSVALE, PA. ALL RIGHTS RESERVED

The clear signal lights were confused with lights along the track and frequently such lights were accepted for proceed aspects. A change became necessary, and the present color system was adopted. Green became the color for proceed, yellow or amber was adopted for caution, and red was retained for stop. The first colors were dark with low transmission values. As glass manufacturers improved their processes, better color control was possible, and the present high transmission colors were adopted in 1935. An intermediate step had previously been taken in 1918. In addition to the three colors mentioned before, purple, lunar white, and blue have been used for special aspects.

Optics

Light signals in general are classified in two ways. First as to use or form and second as to the type of optics used. The use or form groupings are (1) Semaphore Lamps and Markers, (2) Color Light Signals, (3) Position Light Signals, (4) Color Position Light Signals. The optical groupings are (1) Reflector Type, (2) Lens Type, (3) Combination Lens and Reflector Type.

Semaphore lamps are still used both on semaphore signals and on light signals as marker lights. They fall into the classification of reflector signals and have the simplest form of optics. The Union Style D lamp (example) is of this type. It consists of a ground and polished 5" diameter mangin mirror, with lamp socket and lamp all mounted in a cast iron case. The lamp socket is set and sealed, so that a signal precision lamp placed in it will have its filament located at the focal point of the mirror. A mangin mirror is a glass secondary reflector whose front and back surfaces are sections of two non-concentric spheres of different radii. The relationship of the radii and the eccentricity of the centers of curvature is fixed so as to produce a desired focal point. The focal length of a reflector is usually designated as the distance between the focal point and the front edge of the reflector, although it may sometimes be listed as the distance between the focal point and the center of the back surface.

I spoke of the mangin mirror being a secondary reflector which may need some explanation. Reflectors are of two general classes, primary and secondary. Primary reflectors are ones which have the reflective material or silvering placed on the front or exposed surface. They are usually made of metal, although sometimes made of glass. Outstanding examples of primary glass reflectors are those used in astronomical telescopes. Secondary reflectors are ones which have the reflective material or silvering placed on the back surface with the light rays approaching and leaving the reflective surface through the body of the reflector. Secondary reflectors are usually made of glass, but occasionally are made of quartz or transparent plastic.

US&S DIV. WABCO - SWISSVALE, PA. ALL RIGHTS RESERVED

Primary reflectors are theoretically more efficient than secondary ones, but their reflective surfaces are more vulnerable to damage and to loss of efficiency through dirt and corrosion and require extreme care in cleaning. The secondary reflector is virtually immune to such damage to its reflecting surface and is very easily cleaned. It will also maintain a much higher percentage of its maximum efficiency for a longer period of time without care than will the primary reflector. For these reasons, most reflectors now used in railway signaling are of the secondary type.

Mangin mirrors are very efficient reflectors, although with their ground and polished surfaces, they are higher in cost than other types which are usually molded or formed. The Style D reflector in conjunction with a 10 volt, 40 watt signal precision lamp will produce a beam intensity of approximately 100,000 candlepower.

Thus, even when using a very low wattage and low voltage lamp, an adequate night indication can be obtained on semaphore signals.

The parallel beam from the semaphore lamp is projected through an opening in the cast iron case which is covered by a clear plain flat window. When the Style D lamp is used as a marker light, the plain window is changed to a convex roundel of the appropriate color. It projects a 5" diameter beam, and we also have a marker lamp unit which projects an 8" beam with similar optics. It is identified as the HC-41 marker and uses a formed parabolic reflector. The use of these two reflector type signals is recommended only when they are to be constantly burning markers, since sunlight or the headlight of a locomotive might make them appear to be illuminated when they should not be.

Color Light Signals

Color light signals are of two general types; i.e., molded doublet lens type such as our Styles N-2 and R-2 and searchlight type. The molded doublet lens color light signal is the oldest offshoot of the original light signal. With it, each aspect is obtained from a separate unit having an inner lens of the proper color, and signals are made up of two or three units mounted in an outer case and arranged as desired. The front of the case is carefully machined, as is the mounting surface on the back of each unit, so that the beams from all of the units in a given signal will line up with and be parallel to each other. 5-1/2" and 6-3/8" diameter lens units are used for short range signals and 8-3/8" diameter lens units for long range ones.

We have a sample of the 8-3/8" diameter or R-2 lens unit here. The front lens is an 8-3/8" clear stepped pressed lens of 4" focus. This type of lens is used to provide a relatively cheap lens with near uniform thickness of glass at all points. The curvature of the

US&S DIV. WABCO - SWISSVALE, PA. ALL RIGHTS RESERVED

steps is the same as that for a simple thick lens of the same focal length. It is made by first designing a simple thick lens with a simple curve on the back surface. Sections of this curved surface are moved in toward the front surface with the amount of shift for each section increasing toward the center of lens. This arrangement produces the stepped effect on the back surface and gives uniform thickness of glass for all steps assuring minimum light loss. There is some loss due to the draft on the riser portion of the steps, but it is much less than the transmission loss through the heavy glass in the center of a comparable simple lens. Another factor is that a simple thick lens cannot be satisfactorily molded as either or both surfaces would have to be ground. The varying thickness would result in distortion and sag because of uneven cooling. The inner lens is a 5-3/8" colored stepped pressed lens which in combination with the clear front lens gives a focal length of 1/2". Mounted between the two lenses and held in place by a compression spring is the close-up prism for near indication which can be adjusted easily by removing the back lens.

The porcelain socket is attached to the lens unit by means of an antimony lead seal through two studs. In a photometric darkroom, the socket, held in an adjustable jig attached to the unit, is adjusted optically for maximum light output and best axial alignment with a standard lamp inserted. The socket, while still attached to the jig, is permanently fastened to the unit by having molten antimony lead, poured around the two studs which extend through holes in the porcelain support. The final light output is measured on a photometer, and if it does not measure up to an established standard, the unit is rejected. Because of this adjustment, the beams from all three units will line up together and the signal can be aligned with the track by one man using our special telescope.

The lens units for the 6-3/8" short range N-2 signals are similar to the 8-3/8" R-2 units except for size. They are built and handled in the same manner.

Position Light Signals

Position light signals are light signals which are made up of groups of light units arranged to represent the positions of a semaphore blade. A horizontal row of three lights is the stop indication, a vertical row of three lights is the proceed or clear indication, and three lights arranged in an upper quadrant 45° row is the approach indication. Various combinations can be used to provide additional aspects.

The signal is usually arranged with a circular background, and in the case of a three position signal, consists of six units grouped about a seventh unit so as to provide the proper rows of

US&S DIV. WABCO - SWISSVALE, PA. ALL RIGHTS RESERVED

of three. The seventh unit or "hub light" is common to all indications and burns constantly.

The position light signal unit has progressed from a medium range lens type signal to the present long range reflector type unit, which we have displayed here. This sample is the present Pennsylvania standard. It has a high intensity 5" diameter beam produced by a spheratoric reflector. This is a high efficiency ground and polished reflector of patented form. Its outer surface is spherical, but the front surface is compounded so that the center is raised slightly. The lamp is pointed in toward the reflector horizontally on its axis. The parallel beam passes first through a phankill unit, then through a flat clear spreader roundel and finally through the cover glass. The spreader roundel spreads the beam through 18° horizontally (9° either side of axis) to take care of track curvature and also bends a portion of it down for near indication. As you will notice, the color is obtained from the cover glass. It is a special high transmission yellow called "noviol" which has been selected to be distinctive and to avoid confusion with wayside white lights. The cover glass has a special conical form which has been designed to break up surface reflection. The spreader roundel is inclined 15° back at the top to direct reflected light out of the beam.

The position light signal is standard on the P.R.R. and the N. & W. R.R. and is used in some degree on other roads, usually however, for special indications. The N. & W. unit is basically the same as the P.R.R. unit but has a different cover glass and does not employ the flat inclined spreader roundel. A "noviol" convex cover, inclined 15° forward at the top is used, and prisms formed on the inner side provide the necessary spread. The near indication is provided by an auxiliary prism mounted at the top behind the cover glass.

Color Position Light Signals

The color position light signal was developed to combine the best features of both the color and the position type signals. It not only displays the indications in color but also, by arranging pairs of the colored units in the proper angular relationship, it simulates the corresponding positions of a semaphore blade. Since color is involved, no hub light is used and indications are as follows: clear or proceed, two green units in a vertical row; stop, two red units in a horizontal row; caution, two yellow units in an upper quadrant 45° row; caution slow speed, two lunar white units in a lower quadrant 45° row.

The units are 8-3/8" diameter doublet lens combinations made up of an inner molded colored lens, and an outer clear molded lens. Six units make up a signal, two of each color, arranged in a circle. They are adjustably mounted to a boiler plate background

US&S DIV. WABCO - SWISSVALE, PA. ALL RIGHTS RESERVED

II

and extend through openings in it. Color position light signals are standard on the B. & O. R.R. but are used to only a very minor degree on other roads.

Searchlight Signals

The searchlight signal was developed in an effort to provide a long range light signal which consumed less power than the doublet lens color light signal and which also projected all of its indications through one lens system. This latter goal would effect savings in lenses, lamps, etc., and also eliminate the necessity of looking at different parts of the signal for the various indications.

In the development of this signal, it was necessary to be able to move colored filters into and out of the light beam. The searchlight signal, therefore, became a mechanism type signal. To conserve power and space and to provide the safety required in railway signaling, a three position polarized relay mechanism was adopted. Since the operating torque was small, the colored filters also must be small and light. Best results were obtained with glass discs 1" in diameter and 1/16" thick held to very close tolerances.

The optical problem became one of providing a light beam small enough to pass through the 1" roundels yet one which could be converted into a large signal beam, and whose source could be placed far enough away to clear the roundel carrying member. The optics to provide such a beam places the searchlight signal in the classification of combination lens and reflector signal. The searchlight signal reflector is ellipsoidal, being slightly less than a half section of an ellipsoid, produced by the rotation of an ellipse about its major axis. An ellipsoid has two foci, and one of its properties is that all rays emitted from a light source located at one focal point will be reflected and concentrated at the other focal point. The section which makes up the searchlight reflector has an extremely large angle of acceptance with a correspondingly high efficiency.

After the light rays pass the conjugate foci, they form a cone of light which has a vertex angle of 69°. This cone of light is converted into a parallel beam by the lenses. The point in the beam where the rays concentrate is its smallest part and would be the best place to locate the roundels. However, due to the intense heat of the concentrated rays, the roundels are located 1/4" away from this point toward the reflector.

The colored roundels are made of a special glass with colors held to very close limits of chromaticity and are spun into protective aluminum rims. The red and yellow roundels are made of heat resisting glass but due to color limitations the green roundel

US&S DIV. WABCO - SWISSVALE, PA. ALL RIGHTS RESERVED

cannot be made of such material. Instead, it is made of good quality glass and is pre-cracked before being spun into its rim. This pre-cracking eliminates heat breakage after the signal is in service. Blue and purple roundels, because of their high absorption of red rays, are also pre-cracked. The pre-cracking is done by the hot wire method and results in a very thin straight crack.

The red roundel was formerly a flat disc as are the other colors. Sunlight reflection from its front surface caused paling of the red beam and possible confusion of its color, so the form was changed to a 45° cone. This is assembled with the point toward the reflector and all reflex light is directed out of the beam. Shortly all three roundels will be conical, which will provide a manufacturing advantage.

The original Union searchlight signal used an 8-3/8" stepped molded lens of 5" focal length. This is known as the Style H signal. As greater range with lower wattage lamps was desired, the present H-2 signal was developed. It has a doublet lens combination made up of an outer 8-3/8" ground and polished plano-convex lens and an inner 4-1/2" ground and polished plano-convex lens. These are spaced 5-5/8" apart and have a combined focal length of 2-3/8". The outer lens is mounted in the signal case with the inner lens and reflector being a part of the mechanism carrying the colored roundels. The mechanism is demountable from the outer case but is securely bolted in place and accurately located with respect to the outer lens.

The operating unit or mechanism is a polarized D.C. motor type relay employing a "Z" type armature. The armature rotates on special hardened knife edge bearings and carries the roundels mounted in a vane. The operating coil surrounds the armature core and can be controlled directly from a polarized line circuit without intermediate relays other than those connected to the track circuit. Originally, the field was provided by 6 volt field coils energized from a local battery. Up-to-date signals use a permanent magnet field formerly supplied by 8 tungsten magnets and now supplied by 2 alnico magnets. The armature is balanced with lead counterweights and biased to a center de-energized position by auxiliary counterweights. Normal energy rotates the armature to the right to move the yellow roundel into the beam and reverse energy rotates it to the left to move the green roundel into the beam. The mechanism carries one dependent front-back contact on each side. Two different operating coils are used. One of 250 ohms for 6 to 10 volt operation and another of 500 ohms for 10-14 volt operation.

The latest development in searchlight signals is the Style H-5 which has been in production since 1938. It differs from the H-2 in several respects. The optics (excepting the colored roundels) are all mounted in the signal case, permitting individual signal

US&S DIV. WABCO - SWISSVALE, PA. ALL RIGHTS RESERVED

adjustment with somewhat greater candlepower output. The mechanism is completely plug coupled and can be changed out in a very short time. It is also mounted on rubber shock absorbers to relieve contact bounce from vibration. This is possible, since movement of the mechanism does not affect the optical parts as it would in the H-2. Contact capacity has been increased to provide 2 front and 2 back independent contacts on each side. The reflector is snapped into the case on adjustable ball and studs.

The searchlight signal with its compound optics is optically the most efficient of the color light signals. A strong beam is produced with comparatively low power consumption. The H-2 signal using an 8 volt-5 watt lamp will produce a beam whose range in red is approximately 5600'. This is the equivalent of the R-2 unit using a 10 volt-18 watt lamp. The resulting reduction in power consumed is 72%.

There are a number of auxiliaries which are important in the use of light signals. One of such is the signal lamp. Lamp development has been forced to keep apace with the advancement in signal design. Early light signals used ordinary house lighting lamps and their use was limited to points where potential for such lamps was available. The problems of signal alignment, maintenance of alignment, of uniformity of range and indications, of interchangeability of lamps, and of the use of battery power made it evident that special lamps for railway signaling service would be necessary.

The first step in this direction was the development of small condensed filaments of higher wattage. These have been semi-standarized in the voltage range of 4 to 20 volts and wattage range of 3 to 50 watts. Lower ranges for night lighting of semaphore signals and higher range special purpose lamps in the 36, 55, and 115 volt range are available.

The maintenance of signal alignment and interchangeability of lamps was provided by the introduction of "signal precision" lamps. Commercial lamps are manufactured to a tolerance or allowable variation of 3/32" in light center length and axial alignment. Signal precision lamps on the other hand are manufactured to a tolerance of only 1/64" at these points. This coupled with the tight special bases and sockets used in signals permits absolute interchangeability of lamps without loss in intensity or alignment.

The problem of lamp burnouts has been partially solved by the introduction of differential filament lamps. These lamps have, in addition to their regular filaments, small low wattage high resistance auxiliary filaments with longer life than the main filaments. The auxiliary filament will not burn out as quickly as does the main filament and permits train operation at low signal intensity until lamps can be replaced.

US&S DIV. WABCO - SWISSVALE, PA. ALL RIGHTS RESERVED

II

Auxiliary Devices

Close-up Prisms and Cover Glasses

The speed of light is affected by the media through which it travels. Light travels much slower in glass than in air, and this fact has been used to control the direction and spread of signal beams. As light passes through an even thickness of glass, its direction is not changed but its path is displaced. However, when the thickness of glass is not uniform, one portion of the light wave front leaves the glass and enters air before the balance. The speed increases as the light enters air; and since one portion of the wave front is traveling faster than the balance, the wave front tends to turn toward the slower end or toward the thicker part of the glass. By use of carefully designed triangular prisms of glass, this turning can be controlled. If the surfaces of the prism are straight, the entire beam will remain parallel but will bend sharply. If one or more surfaces of the prisms are curved, the beam will be spread or fanned out throughout the desired angle.

Since all track is not straight and since all signals are not level with the engineman's eye, this phenomena is used to provide continuous indications on curves and from signals mounted high above the engineman's eye level. The modern long range light signal has a very narrow parallel beam with little natural spread. The natural spread of a searchlight signal is only 1-1/2°, that of the R-2 color light signal is only 3° to 4°, and that of the basic optics of the position light signal is only about 2°. Thus, some means must be employed to provide a continuous indication under all conditions.

Close-up prisms are small discs of glass with properly designed prism steps to direct a small portion of the signal beam downward and or sideways toward the engineman as he approaches close to the signal. (Demonstrate for R-2 and Searchlight signals)

For signals with curved track approaches, deflecting or spreadlight cover glasses are used. These are flat or convex roundels with a main cross section of uniform thickness but with small triangular shaped prisms molded on either the front or back surface, as conditions dictate, to control the beam. These prisms are designed to fan the beam throughout their design angle with maximum intensity on the signal axis and minimum intensity at the edge of the beam. Cover glasses which fan the beam to only one side of the axis are called deflecting roundels and those that fan it toward both sides of the axis are called spreadlight roundels. In aligning signals equipped with these roundels, the axis is aligned across the curve at the extreme angle of the roundel or as far as it can be seen. The deflection is directed toward the track, so as to fill in the indication as the locomotive approaches around the curve.

US&S DIV. WABCO - SWISSVALE, PA. ALL RIGHTS RESERVED

We regularly furnish these roundels with 10° or 20° deflection and 30° spreadlight. We also have a roundel which takes 2/3 of the beam and fans it through 7° to one side. The remaining 1/3 is first bent 7° to the same side, then fanned through 3° more while at the same time being spread downward through 10°. This roundel is for special use on signals mounted high on bridges with curved track approach. (Demonstrate cover glasses) Dwarf signals which are mounted low on the ground are normally furnished with 10° deflecting roundels arranged to deflect the beam upward. Modern deflecting roundels are usually flat and mounted with their tops inclined 15° forward, so as to direct surface reflection into the ground away from the engineman.

Sighters

Most modern light signals are equipped either with built-in sighters or with sockets or machined surfaces to which peep hole or telescopic sighters can be attached. By use of special signal precision lamps, the signals are lined up in the photometric darkroom during the lamp socket adjustment so that the axes of the light beams will line up with the axes of the sighters. Thus, one man using a sighter can adjust and align a signal with the track after it is in service.

Phankill Units

In order to minimize the effect of reflected sunlight, phankill units have been developed. These consist of a screen of honeycomb cells attached to the front of the signal and protected by a cover glass. The size and length of the cells are designed so that all light rays approaching from more than 4° from the signal axis are effectively screened from the signal lens. When they are used, the close-up prisms are removed from their regular location behind the front lenses and are mounted in the front of the phankill screen. (Demonstrate phankill units)

US&S DIV. WABCO - SWISSVALE, PA. ALL RIGHTS RESERVED

II

PRINCIPLES OF RAILROAD OPERATION AND RAILWAY SIGNALING

CHAPTER III - THE TRACK CIRCUIT

Invention of the Track Circuit

Dr. William Robinson's invention of the closed track circuit on August 20, 1872 turned out to be the principal element around which railroad signaling systems developed. The primary function of this invention provided a means to detect train and/or cars within defined areas of track. A second function was to provide a useful example of the importance of using the closed circuit principle in providing safe operation of a majority of railroad signal circuits. From this application of the closed circuit principle grew the use of signal control, locking and repeater circuits all on the closed circuit principle.

Purpose of the Track Circuit

Detection

A means of detecting the presence of a train or car on track is accomplished by the track circuit.

The track circuit is made up of a low resistance relay at one end of a given section of track established by using insulated rail joints. This relay is supplied with energy through the rails bonded at each joint by a battery placed at the opposite end of the track to be protected and, likewise established by two insulated rail joints.

A resistor is inserted in the battery lead to the track so that the battery will never be on a dead short circuit when the track is occupied.

When a train enters this track circuit it forms a shunt across the two running rails through the wheels, axles, and journals. It is by this means that the presence of trains in the track section is detected. This shunt must be low in resistance to insure that current formerly in the relay coils will be diverted to shunt through the tracks and consequently cause the relay to drop by gravity opening the front contacts.

The A.A.R. Signal Section has established resistance values for safe track circuit adjustment for various types of circuits based on the shunt value being .06 ohm. Some arbitrary figure had to be taken as a maximum shunt resistance per car, engine, or train shunt and .06 ohm was selected. This is the established standard and is the basis for all track circuit calculations and

US&S DIV. WABCO - SWISSVALE, PA. ALL RIGHTS RESERVED

adjustments. The I.C.C. rule 136.56 requires all track circuits to have at least this shunting sensitivity.

Provide Intelligence

Track circuits may be arranged to provide information in addition to the detection of presence of a train or car. A polarized track circuit arrangement can provide two controls. The track circuit energized with one polarity will position a polar track relay to make its normal contacts. The reverse polarity energizes the track circuit to position a polar track relay to make its reverse contacts. A train in the track circuit will shunt or deenergize the polar track relay, thereby reflecting track occupancy conditions.

Where more than two intelligence controls are required in track circuits, coded type track circuits are used. The make-up of coded track circuits consists of interrupted energy supply or coded energy. These codes may be at the rate of 75-120-180 pulsations per minute and equipment is connected to the circuit that will respond only to the correct code or frequency. Strictly speaking, we might term them tuned circuits. Frequencies lower than 75 and higher than 180 are in use for special purposes, but the conventional codes are 75-120-180.

The principle of operation is to normally have the high frequency on and as more restricting information is required, to step down to the lower frequencies. Only one code is on at any one time. This system is also dependent on shunt for no code and the sensitivity to shunt is improved over the steady energy track circuits because of the pulsing effects.

Polarized and coded track circuits are applied where there are not line-wires available between signal locations to transmit signal control information.

Provide Broken Rail Protection

It is a requirement of the I.C.C. (rule 136.51) that broken rail protection be provided where track circuits are used in signal systems. The ability of a track circuit to detect broken rails is contingent on the location of the break and the possible leakage through the ballast and ties around the break for the operation of the track relay.

It must be appreciated that to detect broken rail a sufficient amount of resistance must be inserted in the circuits to limit the current that reaches the relay to at least below its pick-up point and in the past it has been the practice that it would be below the release point of the relay. This difference of pick-up point versus release point is contingent on where the break occurs. If

US&S DIV. WABCO - SWISSVALE, PA. ALL RIGHTS RESERVED

III

the track circuit is occupied at the time the break occurs, sufficient energy must be delivered to the relay to pick it up which is greater than the energy required to maintain a relay energized. Coded track circuits provide a higher degree of broken rail protection because the interruptions in the track circuit energy for coding purposes requires that the circuit work against the pick-up valve of the track relay rather than the release valve.

Provide Protection Against Open Switch

There are two ways to reflect an open switch into the track circuit. One way which is widely used is to shunt the track circuit through contacts on a switch circuit controller attached to the switch points. This approach is on the open circuit principle and multiple circuits are used to insure greater reliability. Another approach which is on the closed circuit principle is to place insulated joints at the switch location and require the track circuit energy to be carried through switch circuit controller contacts indicating the normal position of the switch.

Types of Track Circuits

There are almost as many different track circuits as there are signal systems. The following is a listing of the most widely used types of track circuits.

Direct Current Track Circuits

1. Non-coded D.C.
2. Non-coded D.C. with series approach
3. Non-coded D.C. with multiple approach
4. Non-coded D.C. - center fed
5. Coded track - normal code only
6. Coded track - normally deenergized reversible
7. Coded track - normally deenergized reversible with series approach
8. Coded track - reversible with steady energy
9. Coded track - normal code reversible
10. Coded track - normal and reverse code
11. Coded track - normal and polarized reverse code

Alternating Current Track Circuits

1. Non-coded A.C. - double rail
2. Non-coded A.C. - single rail
3. AC-DC - Type C
4. Non-coded AC-DC

Special Considerations

Foreign Current

US&S DIV. WABCO - SWISSVALE, PA. ALL RIGHTS RESERVED

III

Because of the necessarily small amount of power required for the track relay operation, foreign current is frequently a problem where paralleling direct current propulsion lines are adjacent to the railroad.

The amount of exposure to foreign current is directly proportional to the length of the track circuit; therefore, the reduction of the length of the track circuits through foreign current territory is a direct means for minimizing this trouble. This, of course, results in more track circuits per signal block.

Another means for protecting against the unsafe effects of foreign current is found in the use of coded track circuits. The coded track circuit affords the longest operable length without danger of false energization from foreign current. Foreign current may, however, cause false restrictive failures on coded track circuits if the foreign current prevents the code following track relay from following code.

Alternating current track circuits may be used to practically eliminate d.c. foreign current interference.

Electrified Territory

In electrified territory, the propulsion return and signal currents flow through the same rails. Propulsion return interference with d.c. track circuits required the development of alternating current track relays and track circuits.

The first relay designed for the alternating current track circuit was the single-element vane relay. It operates solely by the current received from the transformer through the rails of the track circuit. Long track circuits were impractical because of the excessive power necessary for operation.

The next relay designed was a two-element track relay with a track element and a local element. The energy required in the track element is transmitted through the rails, and is comparatively small while the local element requires more energy, which is usually furnished from a local source. This relay requires the presence of currents in both elements at the same time to operate. The absence of current in either element will deenergize the relay.

A later development made in the interest of economy uses a transformer, rectifier and direct current relay in place of the alternating current relay.

US&S DIV. WABCO - SWISSVALE, PA. ALL RIGHTS RESERVED

111

PRINCIPLES OF RAILROAD OPERATION AND RAILWAY SIGNALING

CHAPTER IV

FROM SAFETY ONLY TO ECONOMY WITH SAFETY

Two Block - Three Aspect Signaling with One Block Overlap

This system is shown in Figure 1, in which the fixed signals operate in three positions and display Proceed, Approach, and Stop and Proceed aspects. The Stop and Proceed aspect displayed by each signal, however, is controlled through two blocks instead of one. Systems of this type are generally used on subway and elevated railway lines where trains are operated at high speed at frequent intervals. An automatic stop device is also generally used in such a system.

With a train occupying the block protected by signal 2, it will be noted that signals 2 and 4 are displaying Stop and Proceed aspects, signal 6 an Approach aspect and signal 8 a Proceed aspect. In this system the signals are spaced braking distance apart for the maximum speed so that a train is always protected by the automatic train stop at the Stop and Proceed signal one block in the rear from a following train, should it pass a signal indicating Stop and Proceed.

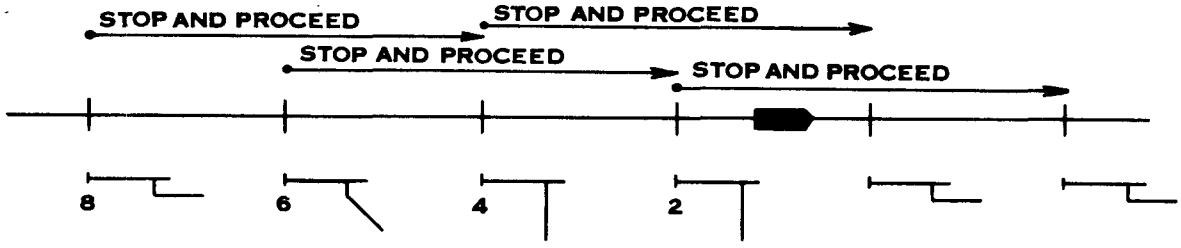

FIGURE 1

Two Block - Three Aspect

A fixed signal for two-block signaling displays Proceed, Approach, and Stop and Proceed aspects, depending upon block conditions. Two-block signaling is so named for the reason that a Proceed aspect indicates that at least two blocks in advance of such signal are occupied. A fixed signal displaying an Approach aspect indicates that only the block immediately in advance of the signal is unoccupied and that a train must be prepared to stop at the next signal. The Stop and Proceed aspect indicates the block in advance of the signal is occupied and that the train must stop and then proceed at restrictive speed. Two-block indication signals are spaced stopping distance apart as a minimum, but the spacing is frequently increased where traffic is light.

US&S DIV. WABCO - SWISSVALE, PA. ALL RIGHTS RESERVED

Figure 2 illustrates the aspects displayed by the different signals when a block is occupied in a system of two-block signaling on a section of track with single direction running of trains.

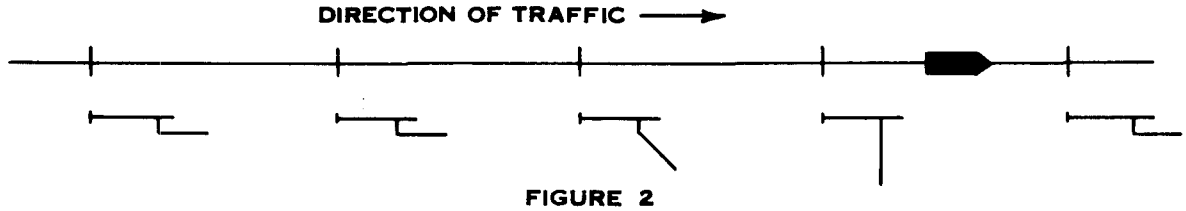

FIGURE 2

Three Block - Four Aspect

Three-block indication signaling is employed where it is desired to increase track capacity; that is, to permit closer spacing of trains moving under proceed signals than would be possible with two-block signaling. With two-block signaling, the signals are located stopping apart, as a minimum, to permit a train to stop at a Stop and Proceed signal when moving at authorized speed at the Approach signal.

In three-block indication signaling each fixed signal displays Proceed, Approach Medium, Approach, and Stop and Proceed aspects, depending upon block conditions. The three-block system is so named for the reason that a Proceed aspect cannot be displayed until at least three blocks in advance of signal are unoccupied. The Approach Medium aspect cannot be displayed until at least two blocks in advance of signal are unoccupied, while the Approach aspect is displayed when the block immediately in advance of signal is occupied. In three-block signaling, the signals are spaced to provide stopping distance in two blocks instead of one block as in two-block indication signaling. This arrangement provides closer spacing between trains as the Proceed signal for the second train will be closer to the Stop and Proceed signal behind the first train. The actual savings in space is dependent on actual braking distances. The three-block system also results in less train delay after stopping at a Stop and Proceed signal because of the shorter distance a train is required to operate at restricted speed.

Figure 3 illustrates the aspects displayed by the different signals when a block is occupied in a system of three-block signaling on a section of track with single direction running of trains.

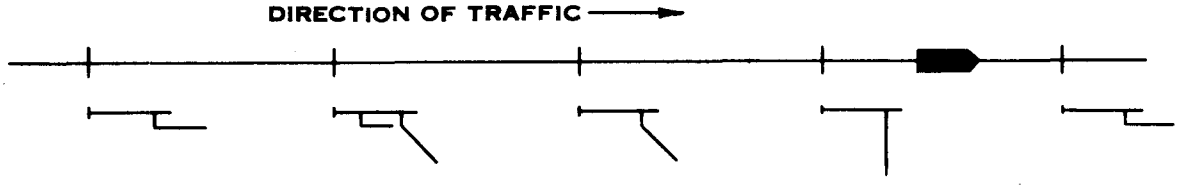

FIGURE 3

US&S DIV. WABCO - SWISSVALE, PA. ALL RIGHTS RESERVED

IV

Signal Spacing - Braking Distance

All signals must be spaced so there is at least a minimum distance between signals to allow compliance with the aspect displayed by a signal. On railroads, braking distances are generally computed based on worse conditions such as longest freight trains, descending grades, and tangent track and these braking distance figures are used as the basis for spacing most signals.

Figure 4 illustrates the relationship of braking distances at different speeds and increased track capacity offered by a three block signal system over a two block system.

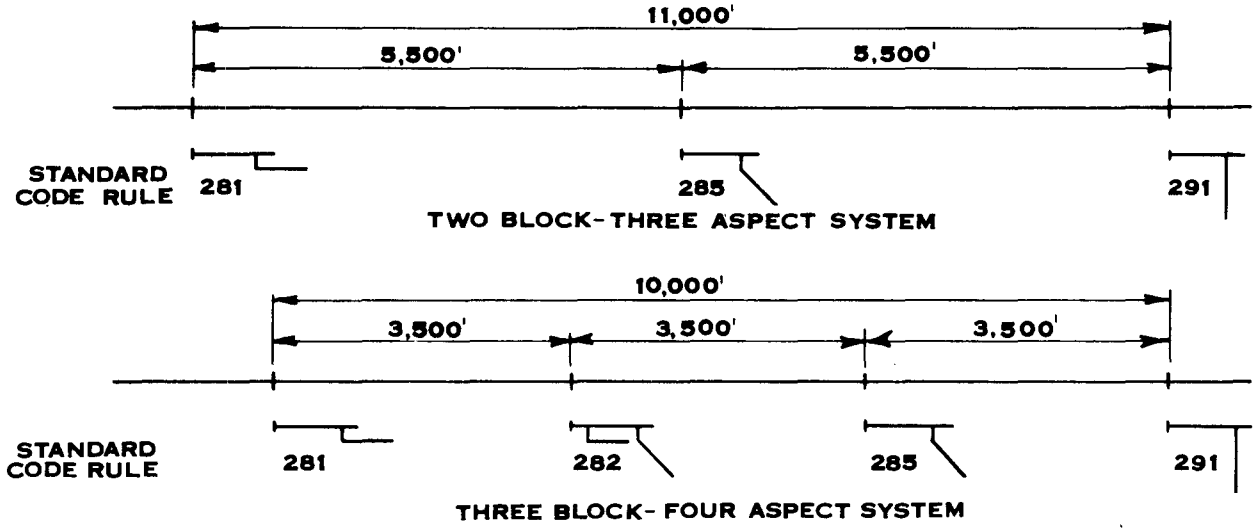

FIGURE 4

US&S DIV. WABCO - SWISSVALE, PA. ALL RIGHTS RESERVED

The above comparison shows a 500' saving in track space in the three-block system between the Proceed and the Stop and Proceed signals. If the first train is moving at 30 mph, there is a 2,000 saving in track space.

Three-block or four aspect systems are used approaching and leaving terminals and on descending grades.

Automatic Train Control and Cab Signaling

Automatic train control, in its broadest sense, implies the use of apparatus to automatically stop a train, or to control its speed, without intervention by the engineman, and is effective only when those entrusted with the operation of the train do not take proper action.

The first train control systems were of the "Intermittent" type. With the "Intermittent" types, the indication from the track to the train is transferred at certain definite points only, usually located at wayside signals. Normally, the indication as communicated to the locomotive is not changed between any two indication points.

One example of the "Intermittent" system is the "Inductive" type system. A wayside indicator consisting of one or more coils assembled around a "U" shaped magnetic structure is mounted parallel to and outside of the right hand running rail. The coils are connected into the signal system with the selection being completed over contacts in the signal mechanism. No battery or other electrical energy is required for this track element. With the wayside signal at Proceed this circuit is closed and open when a "restricting" signal is displayed. A receiver, comprising an inverted "U" shaped magnetic member around which a primary and secondary winding are placed, is mounted on the locomotive in a position to pass over the wayside "Inductor." The passage of a locomotive over an open inductor - indicating a restricting signal is being passed - causes a stick relay on the locomotive to release and thus initiate a brake application. If "acknowledgement" is in effect during the passage of the receiver over the inductor as a result of the engineman operating an acknowledging lever, a brake application is forestalled.

Although the "Intermittent" systems met the I.C.C. specifications and traffic requirements on at least some railroads, a "continuous" system was developed which has the following advantages:

(a) The train is always under the influence of the train control, since the indication may be received at any point and not confined to certain definite locations as with the "Intermittent" types. Therefore, any

US&S DIV. WABCO - SWISSVALE, PA. ALL RIGHTS RESERVED

IV

change in traffic conditions is immediately reflected to the train.

(b) Clearance requirements on the wayside are eliminated as inductors are not used. The receiver on the train picks up signals from the rails.

(c) The "continuous" train control system offers a number of operating options:

(1) Cab signal system only - two to four indications
(2) Cab signal with automatic train stop
(3) Cab signal with speed control - one to four speeds

One type of "Continuous" system is the four-indication four-speed code system. The wayside system feeds an alternating current toward the train, under the receiver (mounted ahead of the leveling wheels) through the wheels and axles returning over the adjacent rail to its source. This current is interrupted by code transmitter to give the following information:

(a) 180 interruptions per minute for a Proceed indication
(b) 120 interruptions per minute for an Approach Medium indication
(c) 75 interruptions per minute for an Approach indication
(d) Steady or no current for a Restrictive indication.

Aboard the locomotive, the voltage induced in the receivers is conditioned in an amplifier to operate a master relay. This relay follows the code in the rails and used to energize resonant circuits for operation of "Decoding" relays. Each resonant circuit accepts the energy for the rate at which it is tuned and rejects the other codes. The Decoding relays are used to display cab signal indications and where required to effect braking actions.

Automatic Interlocking

Automatic interlocking is a term used to define a system of signal protection to permit trains using a railroad that crosses another railroad at grade to do so without making a stop - provided there are no conflicting train movements - and this facility is provided by an automatic control of a system of signals that will provide for safe operation.

The purpose of an automatic interlocking is self evident. It does not require an attendant twenty-four hours per day to route trains through the crossing.

The principle of operation of such a plant can be described for a simple single track railroad crossing as follows: A full complement of home and approach signals is provided for all four routes over the crossing. These home signals are usually placed 500 feet from the crossing. Track circuits are provided through-

US&S DIV. WABCO - SWISSVALE, PA. ALL RIGHTS RESERVED

IV

out the limits of the interlocking and extend one track section beyond each approach signal. The occupancy of a track section in approach to an approach signal will automatically clear the route for that particular train if there are no conflicting train movements. The operation is as follows: a train approaching the approach signal will shunt the track relay and through its back contacts, and a circuit check of the vital area to be protected, complete a clearing circuit for the home signal governing movements over the crossing. This action automatically clears the approach signal so the train may make its movement through the crossing without slowing down.

A special arrangement is necessary, however, to prevent a train leaving the crossing from blocking further use of the crossing by the occupancy of those track circuits. Therefore, a directional selector circuit established by the direction of the train movement is used to eliminate the possibility of trains leaving the crossing from blocking its further use.

The most critical part of an automatic interlocking system is the reliable shunting of track circuits and certainly loss of shunt cannot be tolerated. A five second time check is required by the I.C.C., rule 136.309, to prevent a loss of shunt of this time duration from allowing a conflicting route to be set up.

Centralized Traffic Control

The A.A.R. Signal section definition for C.T.C. is "a term applied to a system of railroad operation by means of which the movement of trains over routes and through blocks on a designated section of track or tracks is directed by signals controlled from a designated point without requiring the use of train orders and without the superiority of trains."

C.T.C. provides, in addition to controlling the signals, control of the main line power operated by remote control from the control point. Those switches, in C.T.C. territory, not power operated, are locked in such a manner that permission must be obtained from the control point before an unsafe operation may be made.

Track occupancy, switch position, and signal indication information is constantly exhibited at the control point. This information is displayed on a control panel consisting of miniature track diagram of the territory being controlled.

A pen-graph may be used to record the times signals are cleared and the time trains enter key track sections. This registration is recorded on a moving chart that indicates the exact time of day or night particular track sections are occupied. By joining these points together a complete graph of each train's progress through the territory is recorded for future use.

US&S DIV. WABCO - SWISSVALE, PA. ALL RIGHTS RESERVED

VI

PRINCIPLES OF RAILROAD OPERATION AND RAILWAY SIGNALING

CHAPTER V - BASIC SIGNALING APPLICATIONS

Automatic Block System - Double Track

One of the simplest signaling applications is the automatic block system applied to a double track railroad where tracks are assigned to a given direction. In this arrangement, as illustrated on AAR Drawing 8006A, signals are arranged successively and protect movements in the assigned direction only on each of the two tracks. In automatic block systems, all the signals are normally in the clear position and as a train passes through the territory, the signals are automatically placed to the "stop and proceed" aspect. As the train progresses through the blocks, the signals to the rear will automatically change to "approach" and "clear." Thus, the term "automatic block system." The train itself causes the signals to the rear to display aspects which protect it from a following train movement.

Intelligence Channels Required

Each aspect on a signal requires an information or intelligence channel for its control. For example, a signal capable of displaying a red, yellow and green aspect requires two information channels, one for the yellow and one for the green. The absence of both causes the signal to display the red aspect. Therefore, the number of required intelligence channels is equal to the number of signal aspects to be displayed minus one.

Three aspect signaling (red, yellow and green) is the most common type of automatic block signaling in this country. In this system, when the block immediately in advance of a signal is occupied by a train, the signal displays the stop and proceed aspect (Rule 291) indicating that a following train must stop and proceed at restricted speed expecting to find another train, broken rail or some obstruction within the block. If the block ahead of the signal is clear, but the next block in advance is occupied, the signal displays the approach aspect (Rule 285) indicating that the train should approach the next signal prepared to stop and should reduce speed accordingly. The control of this aspect is commonly called the home signal control and the relay controlling the aspect is designated HR. If two blocks in advance of a given signal are unoccupied, the signal displays the clear aspect (Rule 281) indicating that it is safe to proceed at maximum authorized speed. The control of this aspect is commonly called the distant signal control and the relay involved is designated DR. In modern signal parlance the term "approach" is used rather than distant. Three aspect signaling is sometimes referred to as two-block signaling since the signals are controlled according to the conditions of occupancy of two blocks

 ALL RIGHTS RESERVED

V

in advance of each signal. Likewise four-aspect signaling could be designated as three block signaling since three blocks must be unoccupied between two trains moving in the same direction in order for the following train to receive a clear signal.

How Intelligence Channels are Obtained

AAR Drawing 8006A, upper portion shows a typical three aspect searchlight automatic signal circuit application using a polarized line control in which the aspects red, yellow and green (Rules 281-285-291) are displayed. In observing the upper track of this drawing, it will be noted that there is but one track circuit between signals 11 and 21 and this is identified as 11T. It will further be noted that the control of signal 11 is accomplished by two line wires that extend from signal 11 to signal 21 where battery is applied. Contacts of track circuit relay 11T are directly in control of 11 signal and anytime this track is occupied signal 11 will be red. Actually, the track relay performs the function of the HR mentioned above. Any time the track is clear, signal 11 will be either yellow or green depending upon the aspect at signal 21. Relay 21HDGPR, is a yellow or green repeater of signal 21 and since its contacts are arranged in pole-changing fashion in the line control of signal 11, signal 11 will be yellow when signal 21 is red (21 track occupied) and green when signal 21 is either yellow or green. Thus, it can be seen that if two blocks are clear (both 11T and 21T) then signal 11 will be green.

The single front contact of 21TR relay in the positive wire controlling signal 11 is inserted to prevent a flash-up from red to green on signal 11 wherever a single high speed engine passes over the insulated joints at signal 21. In such case track circuit relay 11TR may become energized due to the engine vacating this track circuit before relay 21HDGPR becomes de-energized since it is necessarily slow release. Thus, signal 11 is held at red until 21HDGPR is de-energized and pole changes the line circuit.

The lower portion of this same AAR Drawing 8006A, shows typical four aspect searchlight automatic signal circuit application with local control by the track relay and retained neutral polarized line relays. The dotted circuit indicates how to accomodate a situation where the distance between signals precludes the use of one track circuit. Signal 22 shown on the lower track is equipped with two arms (22A and 22B) and through the combination of both arms is capable of displaying code rules 281-282-285 and 291, which are green over red, yellow over green, yellow over red, and red over red, respectively.

With the block (track circuit 22T) immediately in advance of signal 22 occupied, the signal will be red over red. With track circuit 22T unoccupied, but track circuit 12T occupied, signal 12

US&S DIV. WABCO - SWISSVALE, PA. ALL RIGHTS RESERVED

V

will be red over red and signal 22 will be yellow over red. With two blocks clear (22T and 12T unoccupied) but with the signal in advance of signal 12 red over red then signal 22 will be yellow over green. When three blocks in advance of signal 22 are unoccupied, signal 22 will be green over red or its least restrictive aspect. The polarized line circuit extending from signal 22 (22DR relay) to signal 12 is used to convey two information channels for the control of signal 22 and the track relay 22TR is used to control the remaining aspects.

Approach Lighting

Relays 11AER and 21AER are connected in series withthe signal mechanisms and function to light the signal lamp when the track in approach to the signal is occupied. For example, when 11T is occupied, relay 21AER will be de-energized and its back contact will light the lamp for signal 21 similar to the lighting circuit shown for signal 11.

Application Principles Involved

Battery Feed Opposite from Relay

It will be noted by observing the control circuit for 22DR (bottom portion of 8006A) that the battery feed is at the far end of the circuit. For a double wire - double break circuit, this is the proper method of connection as it involves maximum protection against crosses and grounds which can occur in open line wire or underground cable construction.

In the case of single wire - single break circuit, such as that shown for control of 11HDGPR, (upper portion of 8006A) the plus battery (B) is shown at the end of the circuit opposite the relay.

Closed Circuit Principle

In order to obtain maximum safety and to comply with Interstate Commerce Commission Rules, all vital circuits must be designed on the closed circuit principle. For example, refer to the control circuit for signal 11 (upper portion of 8006A.) Here it can be seen that to energize signal 11 and cause it to display either yellow or green, all of the control wires must be closed. Any broken wire or de-energized relay in its control will cause signal 11 to be without energy and would thus display a red aspect. It can be noted that all other circuits for control of relays or signals are also designed under the same principle.

Double Wire - Double Break Versus Single Wire and Common

There are no I.C.C. rules which require signal systems to be designed using double wire - double break circuits. It is, however, the practice of our company to recommend this arrangement, especially for certain control circuits. Many railroads also follow the double

US&S DIV. WABCO - SWISSVALE, PA. ALL RIGHTS RESERVED

wire double-break although many of the older systems, some of which are still in service today, use the single wire and common type of control. This latter method results in a savings of line wire and will be more clearly covered in the following discussion of single track application of automatic block.

Automatic Block System - Single Track

Intelligence Channels Required

For background and discussion of this subject, US&S Typical Drawing TE3A4 Sheets 1 and 2 will be used. This set of drawings cover an arrangement of Absolute - Permissive - Block signaling. This latter term known as A.P.B. means that such a system provides absolute (full) block protection for opposing moves while at the same time provides permissive protection for following moves.

The system covers a single track application and signals are arranged to accommodate moves in both directions. There is also shown, a passing siding where trains can meet and pass each other. The system employs three wires throughout the territory for control of signals in both directions and is an example of the single wire and common method of control. The top wire controls signals in one direction while the bottom wire controls signals in the other direction. The middle wire identified with a C is used to provide the return current for both circuits.

Note that sheets 1 and 2 of Drawing TE3A4 can be arranged to show a repetitious section of railroad by simply placing one sheet next to the other and continuing to overlap in this fashion. A territory similar to the control limit diagram or even larger territory can be illustrated by the use of just these two sheets.

The intelligence channels provided by this system are similar to the system of double track signaling described earlier in that the signal wires provide the channels for control of the signal aspects. On this typical, these are red, yellow and green. This requires the use of two wires arranged to be pole-changed. In APB signaling, the opposing signal control must also be considered.

Opposing Movement Protection

With no train occupying the track between stations, all signals are displaying the green aspect. When a train passes a headblock (the signal location leading into the station-to-station block) all signals in the opposing direction within the block must be controlled so as to convey the stop or stop and proceed indication. This is accomplished by what is sometimes called a tumble-down action.

Assuming an eastward train (left to right on drawing) passing signal 1, upon occupancy of 1T, the control circuit for signal 4 is opened by a front contact of relay 1TR. Relay 4PCR then becomes de-energized and in turn opens the control circuit for

US&S DIV. WABCO - SWISSVALE, PA. ALL RIGHTS RESERVED

signal 6, which then displays the red aspect. Again, 6PCR opens its front contact and causes the circuit to signal 8 to become de-energized and a red aspect is displayed on signal 8. You will note a contact of the SR relays in each of the signal control circuits. The purpose of this contact will be explained later. Incidentally, signals 1 and 8 (headblock signals) are unique in that when they display the red aspect, they are conveying the "Stop" indication (Rule 292). It is obvious that this should be so to provide proper protection to the station-to-station block.

It is appropriate to point out here, that the APB method of signaling does not provide for a total method of train operation, but is only used in support of train order-time table operation as a means of providing additional safety. However, the basic APB philosophy of control is what is used for control of the intermediate signals in a centralized traffic control system. It is, therefore, important that this concept be understood.

Extra Function of Direction Establishment

The outstanding feature of the APB system, is that it provides signal protection for both following and opposing train movements. Basic to this feature is the determination and establishment of direction of train movements. This is accomplished by stick relays at each intermediate signal used in conjunction with the signal control line circuit. These relays are identified as 4SR, 5SR, etc., to agree with the respective automatic signal.

In describing the operation of the directional stick relays, let us consider the 5SR relay control as shown on Sheet 2. First, it will be noted that this relay, as well as all other stick relays, is normally de-energized. In order to explain its pick-up and stick circuit, consider that a train is occupying track section 6T and moving in the eastward direction in approach to signal 5. Signal 5 must be assumed to be approach or clear (yellow or green) and its pole changing relay 5PCR energized. As the train passes signal 5 and occupies 5T, front contact of 5TR will open the control of signal 5 and it will be placed to red. Relay 5PCR will become de-energized. However, since it is slow-release its front contacts will not open immediately. During the period of time that 5TR first becomes de-energized and closes its back contact and before 5PCR releases or opens its front contact, a circuit is established to pick up 5SR. Once 5SR is energized a stick circuit is established through its (5SR) own front contact which will retain energy to its coils. As the train progresses through the block, relay 5SR is held energized through its front contact and the 5TR back contact. When the train is occupying 8T, 5SR is held energized by its front contact and by the back contact of 5PCR. Note, that relay 5SR determines the direction of travel and registers or remembers that direction.

US&S DIV. WABCO - SWISSVALE, PA. ALL RIGHTS RESERVED

V

At the time relay 5SR becomes energized, its front contact in the control of signal 3 prepares a circuit to control signal 3 to yellow as soon as the rear end of the train entirely vacates track section 6T. Without the directional stick relay 5SR and its contact in control of signal 3, signal 3 would remain at stop even though the train had vacated track circuit 6T.

Summary

There are many variations to the above cited applications of automatic block signaling and many special situations to be treated carefully in order to maintain utmost safety of train operation. Reference is made to the many typical circuits contained in the AAR typical circuit plans and to our own US&S typicals, designed and maintained in the Advance Development Group. The circuits contained in this chapter will serve, however, to illustrate the basic principles involved.

US&S DIV. WABCO - SWISSVALE, PA. ALL RIGHTS RESERVED

TYPICAL THREE ASPECT SEARCHLIGHT AUTOMATIC SIGNAL CIRCUITS

USING DIRECT POLARIZED LINE CONTROL
(CODE RULES 281 - 285 - 291)

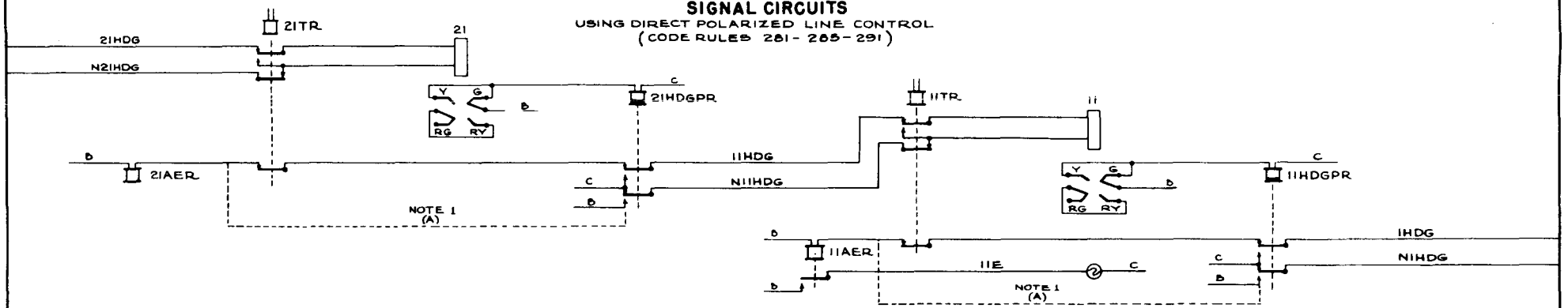

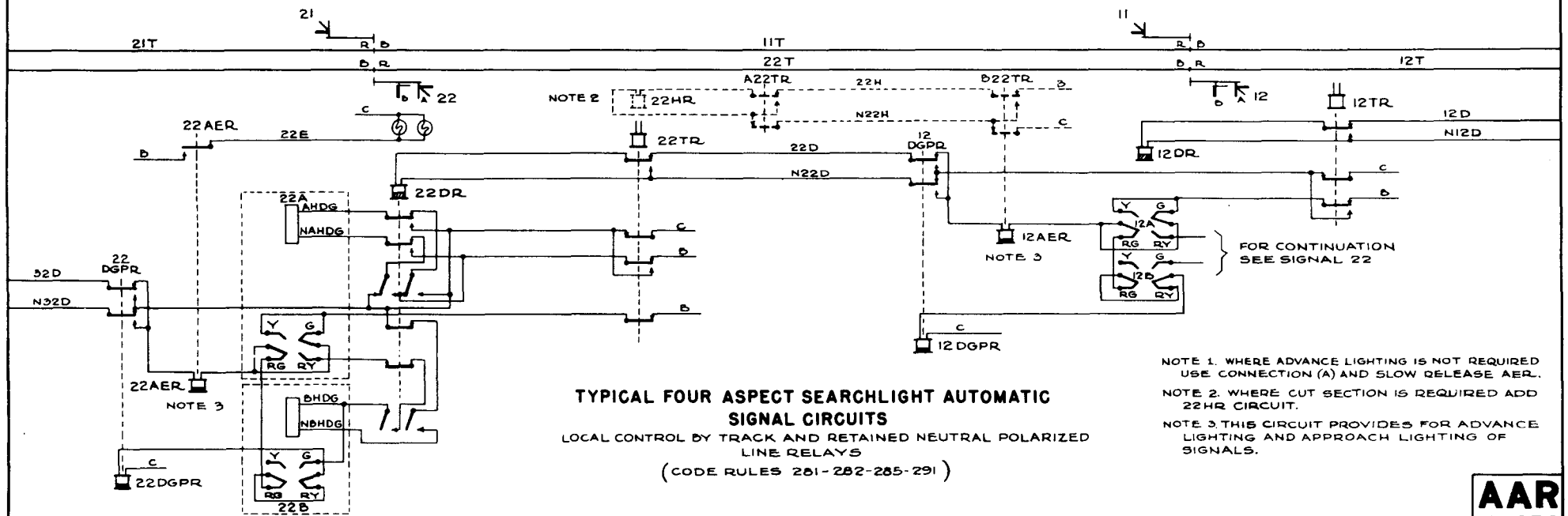

TYPICAL FOUR ASPECT SEARCHLIGHT AUTOMATIC SIGNAL CIRCUITS

LOCAL CONTROL BY TRACK AND RETAINED NEUTRAL POLARIZED LINE RELAYS
(CODE RULES 281 - 282 - 285 - 291)

NOTE 1. WHERE ADVANCE LIGHTING IS NOT REQUIRED USE CONNECTION (A) AND SLOW RELEASE AER.

NOTE 2. WHERE CUT SECTION IS REQUIRED ADD 22HR CIRCUIT.

NOTE 3. THIS CIRCUIT PROVIDES FOR ADVANCE LIGHTING AND APPROACH LIGHTING OF SIGNALS.

SEPT. 1947

AAR
SIG. SEC.
8006A

PRINCIPLES OF RAILROAD OPERATION AND RAILWAY SIGNALING

CHAPTER VII - RELAY INTERLOCKING

INTRODUCTION

In Chapter VI we learned of the desirability of controlling complex track layouts from the standpoint of safety and economy. The early applications of interlocking were mechanically locked affairs which adhered to the AAR Standard Code Definition on an interlocking namely "an arrangement of signals and signal appliances so interconnected that their movements must succeed each other in proper sequence and for which interlocking rules are in effect". In a mechanically locked interlocking machine, the levers are so physically interconnected that a route must be set up properly before a signal can be cleared; and after it is cleared, the route cannot be changed unless the signal is again restored to the stop position. These interlocking plants were applied to terminals, junction points, railroad grade crossings, main lines, drawbridges, and other points where traffic conditions require the expeditious movement of trains.

Economics, especially with regard to the extremely high cost of maintenance, and the inevitable advance of technology brought forth the relay interlocking where the protection provided by the mechanical interlocking of physical members was supplanted by circuit locking of devices which controlled the switches, derails and signals. The first all relay interlocking was placed in service by the Chicago, Rock Island and Pacific Railroad at Blue Island, Illinois in 1929.

Control Machine

The interlocking or control machines furnished by US&S are usually of the Style C type, which are also used for our C.T.C. installations. Two-position switch levers and three-position signal levers are used for control, all of these levers being of the free moving type. Push buttons of various types, track models and indication lights and bells and various other refinements can be used as desired. Both the rotating levers and push levers, when actuated, open or close contacts which provide the means of control.

Electric Locking Comparison with Mechanical Locking

On a straight mechanical interlocking, there were available, essentially, three types of protective locking. The first type, of course, was inherent in the mechanical locking of the interlocking machine. This locking can be considered as a form of route locking, inasmuch as the clearing of the signal places the locking in effect after a bona fide route is lined up.

 ALL RIGHTS RESERVED

A second type of protection was afforded by the use of detector bars to prevent the throwing of a switch, movable frog, or derail under a train. This type of protection was limited, but was the best that could be provided in the early days of interlocking.

A third means of protection was provided by mechanical time releases. These releases operated each time a signal lever was placed to stop and prevented the release of the mechanical locking until a time interval had expired. This system of locking could cause serious delays if the leverman made an error in lining up a route and had to change that route. On the other hand, it provided a means for protecting the route beyond the point that the train passed the home signal. Due to the fact that the operator was required to place the home signal at stop as soon as the train passed the signal, there was the possibility that the mechanical locking would be released before the train reached the detector bars. As placing the home signal at stop actuated the mechanical time release, this time release, in turn, caused the route locking, inherent in the mechanical locking, to remain in effect until the time interval had expired. It can be seen that this locking could bridge the time required for the train to proceed from the home signal to the limits of the detector bar protection.

With the development of reliable track circuits and as power interlocking, with its source of electricity, began to replace the straight mechanical interlocking, electric locking of many different types was also developed. An understanding of the various types of electric locking is essential in the design of modern relay interlockings. Discussion of these types of electric locking follows:

Detector Locking

Detector or section locking was primarily intended to replace the detector bar which was a constant source of maintenance difficulty and which was only partially effective. This type of locking depends entirely on the shunting of a short track circuit, the locking applying to switches, movable frogs, and derails, within the limits of the track circuit. In interlocking plants with mechanical locking, detector locking is applied to special electric locks on the individual function levers. In the all-relay type of interlocking plant, detector locking is usually applied to a function by removing the source of power from the control circuit of the function.

Time or Stick Locking

Time or stick locking, which is roughly equivalent to the locking derived from the use of the mechanical time release, is the next logical step in providing electric locking. This locking is

US&S DIV. WABCO - SWISSVALE, PA. ALL RIGHTS RESERVED

designed to be placed into effect as soon as the signal lever is moved to clear a signal. It is usually released by the occupancy of the detector track circuit immediately in advance of the home signal. If the home signal is placed to stop before a train passes, the locking is released after the expiration of a predetermined time interval. On plants employing mechanical interlocking, this is usually made effective by means of an electric lock on the signal lever which prevents the lever from going to the full normal position, thereby unlocking mechanically the various functions in the route. On a relay interlocking, this locking is derived from a circuit which includes contacts on special stick relays.

Time locking permits of fairly simple circuiting, but imposes the penalty of locking up the plant should the leverman make a mistake in lining up a route. It should be remembered that this type of locking is placed in effect whenever a signal lever is moved to clear a signal, regardless of whether or not a train is approaching the plant.

Approach Locking

In order to provide a more flexible arrangement of locking, approach locking was devised. Approach locking prevents the changing of a route through an interlocking plant after a signal has been cleared and placed to stop when a train is approaching the plant within certain limits. The approach section must include all track sections from the home signal to/and including one track circuit cut to the rear of the approach (distant) signal. The track circuit in approach to the distant signal must not be less than 1500 ft.

With a train occupying an approach section, should a signal be cleared and placed to stop, a time interval is enforced before the locking can be released, the time interval being selected according to the speeds and weights of trains operated through the plant. If the train does not reach the approach section at the time the signal lever is placed normal, immediate release will be obtained. This permits of greater flexibility from the standpoint of changing routes and checking equipment but entails more circuiting including additional line wires to bring the approach indication to the tower.

On plants with mechanical locking, the same special lock is applied to the signal lever as in time locking. This lock prevents the lever from being placed full normal. Hand operated screw releases, clockwork releases or time element relays are usually used for enforcing the time interval.

On relay type plants, the locking is effected by means of special stick relays and the time interval is provided by time element relays of the electro-mechanical (DT-10 & PT-250), thermal

US&S DIV. WABCO - SWISSVALE, PA. ALL RIGHTS RESERVED

(TH-10) of electronic types (PN-150T).

It is general practice to release the approach locking when a train passes the home signal governing its movement through the plant.

Route Locking

When detector locking is used it can readily be seen that many interlocking plants are so extensive as to require more than one detector track circuit. This being true, it is evident that a form of locking must be furnished to continue the locking of a route after a train has passed a home signal and before the train occupies the more remote detector track circuits. The type of locking with which this is accomplished is called route-locking and it insures that the route will remain lined up as long as a train occupies any part of the route.

In older practices the route locking was placed in effect as a train passed the home signal but in modern practice it is placed in effect upon the clearing of the signal.

Directional route locking stick relays are utilized in both mechanically locked and all-relay plants to provide this protection.

Sectional Route Locking

Sectional route locking or, more properly, route locking with sectional release provides a feature which is extensively used on plants that handle a great deal of traffic. Here it is important to allow line-ups of routes to be made as quickly as possible after a train has passed over each detector section.

This type of locking provides for route locking as a train enters the limits of the interlocking plant but with the additional feature of unlocking the functions in each detector section as the train vacates such sections.

This form of locking is one of the most complex and requires the highest degree of skill on the part of the circuit designer. Directional stick relays are used extensively in deriving this type of locking in both interlockings with mechanical locking and all-relay type plants.

Signal Indication Locking

This type of locking, frequently called back locking, is used to insure that a signal placed to stop actually goes to the stop position. Where semaphore approach signals are used, the I.C.C. requires that a check also be incorporated to insure that the approach signal has also returned to a position to agree with the home signal when it is placed to the stop position.

US&S DIV. WABCO - SWISSVALE, PA. ALL RIGHTS RESERVED

A lock on the signal lever which prevents it from being placed full normal, again, is used to provide back locking on plants with mechanical locking. Repeater relays (called red repeaters) of searchlight signals that are energized when the mechanism is in the stop position are used with that type of signal. Where straight light signals are used, it is customary to use only a back contact of the signal control relay.

On all-relay plants red repeaters of searchlight signals are used and similar relays for straight color light signals are used if the control relays are not located in the tower.

Where searchlight signals are used, it is our practice to include a back contact of the green signal repeater relay in the control circuit of the red repeater. This serves as a check on the approach signal inasmuch as the green repeater acts as pole-changer for the approach signal and the de-energized position of this relay is sufficient proof of the yellow position of the approach signal. (This arrangement is based on the use of double-wire double-break control circuits for the approach signal.)

Traffic Locking

Traffic locking is locking between two adjacent towers which prevents the simultaneous clearing of opposing signals governing to the same section of track. It also prevents the changing of the traffic direction when that section is occupied by a train.

A separate traffic lever is usually provided in each tower and the lock circuit for these levers is checked over all track circuits between towers. The signal lever, reversed, mechanically locks the traffic lever, reversed, on plants with mechanical locking. This is accomplished by means of circuits on relay type plants.

Train operation against the current of traffic by signal indication between towers on tracks normally used in one direction requires traffic locking. If this feature is not provided, trains under such conditions must be operated by manual block and train orders.

Check Locking

Check locking provides locking between traffic levers of adjacent towers but does not provide a check of all track circuits. This type of locking is not used extensively and does not permit of operation by signal indication.

Relay Interlocking Application

In order to provide an example of a typical relay interlocking we have included a rather detail description of such a system.

US&S DIV. WABCO - SWISSVALE, PA. ALL RIGHTS RESERVED

Careful study of this system will provide examples of all the locking requisites and the controls necessary to furnish a modern relay interlocking. We will make use of the Association of American Railroads, Communication and Signal Section typical circuit plans shown on AAR Drawing 8010 sheets 1 through 4, attached

These plans show typical local-control, relay-type interlocking circuits for both the searchlight and color-light types of signal. The upper track is used normally for westward and the lower track for eastward movements. Restricting signals, which are the dwarf signals and lower arm signals, are controlled only through the first track section beyond the signal. This is made possible by the use of Rule 290 to apply to the yellow aspect. Rule 290 reads, "Proceed at restricted speed" with restricted speed defined as "Proceed prepared to stop short of train, obstruction or switch not properly lined and to look out for broken rail". Rule 292 reads "Stop" (i.e., stop and stay, since all interlocking signals are absolute signals) and applies to the red aspect. A green aspect is displayed only on high signals, and both the yellow and green aspect on these high signals can be interpreted the same as any automatic block signal.

Sequence of Operation

In describing the sequence of operation, the route from 2RA to 2LA, with switches 1, 3, 5, and 7 normal, will be assumed.

A. Clearing of Signal 2RA.

1. Place all switch levers normal to properly line the track.

2. Pull signal lever 2 to the right which will:

   a. Cut off battery from left end of route check network by means of contact 2NL on signal lever. (Sheet 1)

   b. Close circuit to 2RHSR with contact 2R on signal lever. (Sheet 1)

   c. Open circuit to 2RNLPR with contact 2NL on signal lever. (Sheet 1)

   d. 2RHSR will pick up preparing its stick circuit and de-energizing relay 2RASR, thus completing first step in preparing signal control circuit. (Sheet 4)

   e. 2RNLPR closes its back contact completing the stick circuit for 2RHSR. (Sheet 1)

US&S DIV. WABCO - SWISSVALE, PA. ALL RIGHTS RESERVED

f. 2RASR releasing, de-energizes 1LSR, 3LSR, and 7ESR. 7ESR releasing drops 5LSR and 7LSR. All switches are thereby locked or in other words route locking is in effect. (Sheet 4) 2RASR dropping also closes the signal network circuits to clear 2R signal. (Sheet 2)

g. 2RA clears de-energizing relays 2RARGPR and 2RRGPR. (Sheet 2)

B. Train accepts signal 2RA and proceeds through interlocking.

1. Train enters 1T track section and de-energizes 1TR and 1TPR relays which:

a. Detector locks 1LSR and 3LSR directly and 5LSR and 7LSR indirectly through 7ESR. (Sheet 4)

b. Prepares pick up circuit for 2RASR. (Sheet 4)

c. De-energizes route relay 2RHSR. (Sheet 1)

d. Slots signal to red, which in turn, picks up relays 2RARGPR and 2RRGPR. (Sheet 2)

e. Circuit for 2RASR is now completed and 2RASR becomes energized. (Sheet 4)

2. Train leaves 1T track section and enters 7T track section which:

a. Detector locks 5LSR and 7LSR directly. (Sheet 4)

b. Energizes relay 7ESR, 1LSR and 3LSR thus removing the locking on switches 1 and 3. (Sheet 4)

c. Holds the slotting of signal 2RA. (Sheet 2)

3. Train leaves 7T track section and enters 2T track section.

a. Holds the slotting of signal 2RA. (Sheet 2)

b. Energizes relays 5LSR and 7LSR removing the locking on switches 5 and 7. (Sheet 4)

4. Train leaves 2T track section and if operator has restored signal lever at any time after train has accepted signals all circuits are again in the normal position.

C. Operator restores signal lever before train accepts signal (following Step A).

US&S DIV. WABCO - SWISSVALE, PA. ALL RIGHTS RESERVED

1. Signal lever returned to normal.

   a. De-energizes relay 2RHSR. (Sheet 1)

   b. 2RHSR releasing drops signal 2RA to stop (Sheet 2) and prepares pick-up circuit for 2RTER. (Sheet 4)

   c. Signal 2R dropping to red energizes 2RARGPR and 2RRGPR. (Sheet 2)

   d. 2RRGPR energized closes pick-up circuit for 2RTER. This circuit consists of battery through back contact of 2RHSR, a front contact of 2RRGPR, back contact of 2RASR, front of 1TPR to coils of 2RTER and thence to common. (Sheet 4)

   e. After a predetermined time, relay 2RTER will close its front contact which, in turn, will energize relay 2RASR. (Sheet 4)

   f. Relay 2RASR energized will, in turn, energize relays 7ESR, 1LSR, 3LSR, 5LSR, and 7LSR and will place all circuits in their normal condition. (Sheet 4)

Description of System, Features

Route Check Network

The purpose of the route check network is to provide a preliminary check that a desired route is established before a signal can be cleared and insures that:

1. Opposing signals are in stop position.

2. Opposing signal levers are not in a position to clear opposing signals and cause conflicting moves.

3. Switches in route correspond in position to levers controlling them.

4. Switch levers are in the proper position to assure a complete route for signal to be cleared.

To explain the function and the manner of accomplishing the purpose of the route check network, we will trace the circuit for the control of relay 2RHSR (Sheet 1). Assume that all switches in the field are normal and that all switch levers on the control panel are in their normal position. The circuit for the control of relay 2RHSR is then: battery through back contact of 2LHSR checking purpose "1" above, contact 2NR checking purpose "2" above, front contact of lever normal repeater relay 2LNLPR, front

US&S DIV. WABCO - SWISSVALE, PA. ALL RIGHTS RESERVED

contacts of normal switch repeater relays 7NWCR, 5NWCR, 3NWCR, and 1NWCR checking purpose "3" above, contacts on switch levers 7, 5, 3, and 1 checking purpose "4" above, front contact 2R which contact will close when lever 2 is moved to the right to clear signal 2R, to coils of relay 2RHSR, thence to common. The stick circuit provided on the HSR relays will be described in detail later, as will circuits involving the lever normal repeater relays.

Signal Control Network

The signal control network consists of circuits for direct control of searchlight or color-light signals without the direct use of switch or signal levers. The purpose of the signal control network is to check that:

1. Opposing time and approach locking relay is energized, checking that the opposing signal is at stop.
2. The switch locking relays are de-energized, insuring that the switches in route are locked.
3. All switch repeating relays and track relays in the route are energized, insuring that the switches in the route are in proper position.
4. The time and approach locking relay is de-energized.
5. The route check relay is energized.

Tracing the control circuits for signal 2R (Sheet 2) with all switches normal, energy is supplied through front contact of 2LASR checking purpose "1" above, back contacts of 7LSR, 5LSR, and 1LSR checking purpose "2" above, contacts of normal switch repeating relays 7NWCR, 5NWCR, 3NWCR, and 1NWCR checking purpose "3" above, back contact of 2RASR checking purpose "4" above, front contact of 2RHSR checking purpose "5" above, front signal-selecting contacts of 1NWCR, 3NWCR, and 7NWCR which select 2RA signal, through coils of signal mechanism to return wire to tower; the return wire breaks over back contact of 1RWCR and front contact of 2RHSR to common. This is a double-break circuit as are all circuits external to tower except signal repeating relays.

Contacts of 2RADR, 1TPR, 7TR, and 2TPR are also inserted in the 2RA signal control circuit (Sheet 2) to check track and signal conditions ahead before a proceed aspect can be displayed on the high speed upper arm signal 2RA.

With switches 3 or 7 reverse, lower arm signal 2RC will be cleared, the positive side of the circuit passing through back contacts of 3NWCR of 7NWCR and 1RWCR checking the position of the switch, and contacts of 2RARGPR checking that the A arm is at stop. The call-on control of signal 2RC will be discussed later in the lesson.

US&S DIV. WABCO - SWISSVALE, PA. ALL RIGHTS RESERVED

With switch 1 reversed, dwarf signal 2RD will be cleared, the positive side of the circuit passing through back contact of 1NWCR and the negative side through front contacts of 1RWCR and 2RHSR.

Time and Approach Locking Relay Circuits

Either time locking or approach locking is required to enforce a predetermined time interval before switches can be unlocked and a route changed after a signal has been once cleared and then placed normal. Approach locking is usually required on high speed routes and is applied in this case primarily to signals 2RA and 6LA. Because of the nature of the circuit design, however, it is also effective on the lower arms of these two signals, 2RC and 6LC, which govern diverging routes and serve as call-on arms. Time locking is applied to signal 2RD as well as to all other dwarf signals.

Time locking is made effective as soon as a signal is cleared and the time interval is initiated when the signal is placed normal. Approach locking is made effective after a train has occupied the approach track section with the signal cleared. The time interval is initiated when the signal is placed normal (with the approach occupied). It should be noted that with approach locking, a signal once cleared may be placed back to normal and the switches unlocked without incurring a time delay as long as the approach section is unoccupied. With time locking the time delay is always introduced after a signal has been cleared and placed normal.

In order that the time delay is not applied in normal operation, provision is made to by-pass the time delay circuit by a back contact on the first track relay in advance of the signals. This applies to both approach and time locking circuits.

The time and approach locking relay, ASR (Sheet 4), is the first relay to be de-energized after a route has been established and when de-energized, its contacts complete the signal control circuit and also open the switch locking relay circuits.

As different timing is usually required for high signals and dwarfs, both the DT-10 type of time element relay for high signals and the TH-10 thermal type of relay for dwarf signals are used.

The pick-up circuit for the ASR relays (Sheet 4) has at least two branches, both of which include a back contact of relay RHSR and a front contact of relay RRGPR. The first branch consists of a back contact of the track relay immediately in advance of the signal. This circuit releases the time locking when a train accepts the signal. This locking can be released because as soon as a train does accept the signal, detector locking becomes effective. The second branch consisting of a front contact on the time element relay is the means for releasing the locking if the signal has been

US&S DIV. WABCO - SWISSVALE, PA. ALL RIGHTS RESERVED

cleared and is then placed at stop without a train accepting the signal. This provides protection in the event the operator throws a signal red in the face of an approaching train. The time imposed should be long enough to ensure that the train will be able to come to a stop or will have entered the detector locking track circuit.

Where approach locking is also used, the ASR relay has a third branch which includes a front contact of the approach relay and a contact of 1NWCR in the case of the 2RASR circuit. This provides a means of releasing the locking without going through the long time if no train is approaching. The 1NWCR contact is used to ensure time locking when the 2RD signal is used. With this type of circuit, a long time is imposed with the use of the 2RD signal. A special circuit could be used if desired to use only a short time locking period on the slow speed signal 2RD.

A contact of the TPR relay is used in the control of the mechanical time element relays to prevent momentary operation of these relays when a train accepts a signal and the ASR relay is in the process of picking up.

Contacts of the ASR relay are used in the switch locking relay circuits to impose approach and time locking on all switches as demanded.

Route Locking Relay Circuits

The purpose of the sectional route locking relay circuits is to maintain a switch, or a series of switches, in position until the train has passed over it, and then to release the switch behind the train so that it may be lined up in preparation for other train movements. The route locking relays, shown on Sheet 4, are controlled by a circuit similar to that used at standard interlockings with mechanical locking, except that where the levers are mechanically locked, the route locking relays are opened when the signal levers are moved, whereas at relay interlockings the route locking relays are not opened until the ASR relay opens, which occurs when the HSR picks up (in response to the positioning of the signal lever) after all switches and switch levers are in corresponding positions. This feature prevents manipulation of switches once a route is established.

As an example of sectional route locking, consider a route established from 6L with switch 3 reversed. The setting up of the route, which results in the de-energization of relay 6LASR, de-energizes relay 5WSR, which in turn, de-energizes 3WSR. A contact on 6LASR locks switch 5, 3WSR locks switch 3 and also locks switch 1 when 3 is reversed. A train accepting signal 6 causes 6LASR to become energized but 5TR then detector locks 5 switch. When the train vacates the 5T track section, the locking is removed from the 5 switch but the 1 and 3 switches are locked by

US&S DIV. WABCO - SWISSVALE, PA. ALL RIGHTS RESERVED

contacts on 3WSR. The 3WSR will not become energized until the train vacates the 3T track section and then the 1 and 3 switches are locked by detector locking until the train vacates the 1T track section.

The purpose of the contacts of the time element relays in the route and switch locking circuits will be covered later in the lesson.

The multiple paths in the route locking relay circuits are used to select the various route locking relays as desired with a variation in the routes set up.

The stick circuits on the route locking relays are needed to keep the relays energized when a movement is made in a direction in reverse to the direction in which the route locking relay would normally be used.

Switch Locking Circuits

The purpose of the switch locking relay circuits is to lock all switches and thus prevent their movement when a route has been set up for an approaching train (approach locking), or when a signal has been taken away and is in time (time locking), or when the train is on the track circuit in which the switch is located (detector locking). This is accomplished by opening the LSR relay circuits with contacts of the approach and time locking relays and route locking relays. The dropping of the LSR relay prevents any energy from being supplied to the switch machine.

Multiple paths in the control of the 1LSR relay provide a means of locking the 1 switch only when a route is set up over it.

The circuits shown to the right of the LSR relays will be discussed in detail later.

Added Checking and Control Features

Lever Normal Repeater Relays

The relay, NLPR, is a slow release relay repeating the normal position of a signal lever and opens its contacts approximately two seconds after the lever has been positioned. It is provided to prevent the storage of a control of a signal lever until a route is established and also to prevent the storage of a control of a signal if the signal lever controlling an opposing signal has been operated. For example, if the leverman inadvertently positions signal lever 2 to the right after placing switch 3 reverse and signal lever 6 to the right, signal 2R would clear after signal lever 6 was returned to its normal position, de-energizing relay 6LHSR, which in turn, would complete the circuit for the control

US&S DIV. WABCO - SWISSVALE, PA. ALL RIGHTS RESERVED

of relay 2RHSR. Relay 2RNLPR prevents this condition and makes it necessary for the leverman to return lever 2 to its normal position in order to energize relay 2RNLPR so as to complete the circuit for relay 2RHSR.

The HSR relays are each provided with a holding circuit, completed by the NLPR relay closing its back contact, that may only be released by restoring the lever of the signal affected to the normal position or by track occupancy. This prevents the changing of a cleared signal to a "stop" indication, should an operator inadvertently move a switch lever in route or an opposing signal lever

For movements from signal 4R or from signal 2R with switch 3 reversed, there is an intermediate signal 6R which affects the controls of the above mentioned signals. Relay 2-4RLPR is used to take care of this special condition, and is picked up with lever 4 to the right with switch 3 normal or 2 to the right with switch 3 reverse and relays 6LASR and 2LASR energized, the last named relay being bridged with front contact of 5NWCR. It can be seen that, if the signal lever is moved and the switch is in the proper position to allow a train to proceed to signal 6R and no opposing move has been initiated, relay 2-4RLPR will pick up and close circuits to pick up the HSR relay and clear the corresponding signal. These circuits are not affected by switches and switch levers ahead of signal 6R. The use of this relay eliminates complicated selection in circuits of both the route check and signal control networks. Front contacts of this relay are used both in the route check and signal control networks to insure that the HSR relays and the signal mechanism will not receive energy from an undesired source in the network if the 2-4RLPR relay will not pick up due to a broken lead or some other fault.

Prevention of Switch Control Storage

The common side of the circuit for each switch locking relay is over its own front contact and in multiple are agreement circuits, a normal polar contact of switch repeater relay and normal switch lever contact and a reverse polar contact of switch repeater relay and reverse switch lever contact. With this arrangement, if a switch lever is moved when its locking relay is de-energized, the relay will not pick up until the switch lever has been restored to its initial position to agree with the position of the switch, which completes the pick-up circuit of the switch locking relay and prevents storage of switch control when the switch is locked.

Check of TH-10 Thermal Time Element Relay

Approach locking relay, such as 4RASR, incorporates a circuit to provide a means for releasing the time locking if signal 4R had been cleared and then placed at stop. This circuit consists of a back contact of 4RHSR, front contact of 4RRGPR and front contact of

US&S DIV. WABCO - SWISSVALE, PA. ALL RIGHTS RESERVED

thermal relay 4RTER. With successive operations of a thermal relay the front contact will stay partially closed and, therefore, some means must be provided to check that the full heating time is used each time a cleared signal is placed at stop. To provide time locking on the switches, the heating and cooling time of the thermal relay is here used and by inserting back contacts of the thermal relays in the route or switch locking relay circuits, the switches are time locked during at least a full cooling time which is much greater than the heating time. The small amount of variation in the full cycle is accepted but where the heating time alone is used a complete check must be made that the thermal element has cooled before it can be reheated.

Switch Control and Indication Circuits

The switch control relay, WR, shown on Sheet 4, is of the polarized type and is controlled over front contacts of the switch locking relay LSR and normal or reverse switch lever contacts; the lever contacts are used for pole changing the control circuit of the WR relay. Contacts of the WR relay, either directly or indirectly, control the supply of energy and the polarity of the energy applied to the switch motor. Contacts on the switch circuit controller control the supply and polarity of the energy applied to the WPR relay which, in turn, controls the switch agreement relays NWCR and RWCR.

Control of Switch Lever Light Indications

Each switch lever is provided with three indication lights, one to indicate the normal position of the switch, one to indicate the reverse position of the switch, and the third indicates when the switch is locked. The lamps indicating the position of the switch are controlled by the front contacts of the switch repeating relays and the lamp for the locked indication is controlled by a back contact of the LSR relay. The circuits for these lights are shown on Sheet 1.

Signal Lever Light Indication

Above each signal lever two lights are provided to show when "L" signal or "R" signal is clear. These lights are controlled by back contacts of the RGPR relay, as shown on Sheet 1.

Controls of Call-On Relays

The call-on relay 2COSR, shown on Sheet 1, is picked up by a push button contact in series with "R" contact on signal lever, but is provided with a holding circuit with lever contact and its own front contact, so after push button is released, the relay will hold up until lever is placed normal. Call-on relay 6COSR is controlled by a similar circuit. Contacts on the call-on relay are inserted in the signal control circuit to provide a means of clearing the call-on arm if the route is lined up.

US&S DIV. WABCO - SWISSVALE, PA. ALL RIGHTS RESERVED

Approach Annunciator

An approach annunciator is used in the control tower of an interlocking plant to give the operator advance warning of an approaching train and allows him to set up the route for the train as it approaches. The approach annunciator is usually used when high speed movements are to be made. The circuit, shown on Sheet 1, uses one bell for two or more approach sections. The bell can be operated over the back contact of an L-10 relay. The relay AXR is normally energized with its circuit interrupted during the contact transfer of an approach relay 2RAR and 6LAR. Various circuit arrangements are available for the operation at approach annunciators.

Additional Traffic Lever

An additional traffic lever can be added as indicated by Note 1. The addition of this lever requires the operator to make two movements to clear a signal in reverse to the normal direction of traffic. Both the traffic lever and the signal lever will have to be pulled. Positioning the traffic lever initiates conventional traffic locking circuits in conjunction with adjacent interlocking towers.

Remarks

The control of the track and track repeater relays, approach circuits, signal repeater relay, proceed signal control circuits and approach signal control circuits should be self-explanatory. Circuits for searchlight and color-light signals are similar in most respects and no detailed explanation should be necessary for the following of the color-light signal circuits.

US&S DIV. WABCO - SWISSVALE, PA. ALL RIGHTS RESERVED

PRINCIPLES OF RAILROAD OPERATION AND RAILWAY SIGNALING

CHAPTER VIII - AUTOMATIC AND ROUTE INTERLOCKING

Automatic Interlocking

An automatic interlocking is one in which all locking is derived by means of circuits and the controls for setting up routes through the interlocking plant and clearing signals governing over such routes is accomplished by the presence of a train. No manual manipulation of control devices is required under normal operation. The automatic interlocking is probably the ultimate in signal engineering especially in view of todays insistence on automation and in fact ranks along with automatic train control as a leader in applying automation to railroad operation.

Applications

The automatic interlocking is used principally for two applications. The first is where an existing mechanical plant protecting a railroad crossing is ready for major repairs or even replacement. In this case the elimination of a tower man can frequently justify the retiring of the mechanical facilities and the installation of an automatic interlocking.

The second application is where there are no existing interlocking facilities and trains must by law come to a full stop before proceeding over the crossing. In this instance a plant operated by tower men on a 24-hour basis might not be justified economically, whereas the savings in operating costs due to the elimination of train stops might justify the installation of an automatic interlocking.

The majority of automatic interlockings are at single-track railroad crossings, although more complex arrangements including transfer tracks and even ends of sidings are quite possible.

Today there are some automatic interlockings being installed in conjunction with centralized traffic control projects. The automatic interlocking lends itself quite well to the superimposition of preference controls set up by the C.T.C. operator. One installation is designed to normally favor the C.T.C. controlled railroad. When a train on the crossing road desires to use the plant, the C.T.C. operator sends out a control code that allows the train to clear up the signals automatically after the main line signals have been set to stop provided, of course, that wayside conditions are such to permit the movement. In this case the automatic interlocking was in service before C.T.C. was installed, so that it was only necessary to super-impose the code control to the existing automatic interlocking circuits.

US&S DIV. WABCO - SWISSVALE, PA. ALL RIGHTS RESERVED

In this connection it should be pointed out that many of the principles and techniques of automatic interlocking design are being utilized to provide an automatic centralized traffic control system. Here the approaching trains clear their own signals and opposing trains can set up their own meeting points, proceeding on signal indications. More about this when we come to discuss CTC.

Typical Illustration

There are many ways of providing for an automatic interlocking system and we have chosen a Union Switch and Signal typical circuit plan to illustrate one arrangement. This plan is shown on our Dwg. TE30A9, description of which follows. ----

The circuits shown on Dwg. TE30A9 are for an automatic railroad crossing system involving a crossing of two single track railroad lines. One line has fixed approach signals with approach lighting, the other line has approach lighted three-indication searchlight approach signals, and both lines have approach cleared and lighted two-indication searchlight home signals.

Features

As may be noted on the drawing, all controlling apparatus within the home signal limits is contained within one housing near the crossing, with signal control wires emanating therefrom. This arrangement involves very little more line wire or cable than would be used if the apparatus were distributed at various signals and, in addition, economizes on housing requirements, being more compact and accessible for ready inspection and economical maintenance.

The principal features of this circuit arrangement are detailed to the right of the drawing and are explained in the following circuit description.

Two features of this arrangement of circuits which are worthy of note are a polar relay (RR) with polar contacts which selects which line receives a route, and a neutral locking relay "RLR" which must be energized to allow relay "RR" to be energized and change the routing and which must be de-energized to clear a signal over a route. These relays prevent a change in the route set-up in event of a momentary opening of the detector track relays.

ASR Relays

The ASR relays are approach relays repeating the approach track circuits, but have a stick feature that prevents them from picking up unless either the train passes the home signal or a thermal time relay operates.

US&S DIV. WABCO - SWISSVALE, PA. ALL RIGHTS RESERVED

This arrangement prevents the loss of an approach cleared signal and clearing of a conflicting signal due to a loss of shunt in approach track circuit.

Let us assume that no trains are within the home signal limits or in the approach circuits and all apparatus is normal as shown on the circuit plan. A train now enters track section A3T and shunts relay A3TR, relay 3ASR will open. When A3TR picks up relay 3ASR will not pick up unless a front contact closes on either relays 3SR or 4SR, or thermal relay 3ATER is energized and sufficient time elapses to close its front contact.

With a through move, such as we are describing when train passes signal 3, relay 3SR will pick up and 3ASR will then pick up through front contacts of 3SR and A3TR, after the entire train passes signal 3. The pick-up circuit through 4SR is for a receding move and the circuit through 3ATER is provided in case a train enters track circuit A3TR and then backs off. The last mentioned pick-up circuit constitutes the timing feature in annulling an approach cleared signal before a conflicting signal can be cleared.

Route Selection Relay "RR"

The route selection relay "RR" is of the polarized type with contacts that make or break when the polarity of the energizing current is changed but which retain their last energized position when energy is removed from the relay coils. When this relay is energized with one polarity it closes the circuit for clearing signals on one line and when polarity is reversed it closes the circuit for signals on the other line.

Following the move we were tracing, when relay 3ASR drops, a circuit is established to energize relay "RR" with the polar contacts to the right. The circuit is battery, front contacts 2ASR and 1ASR, assuring no train in conflicting approach sections; back contacts 2SR and 1SR, account of no train on other track between home signals or in receding sections; front contact of RLR, shows that all signal controls are open over back contact of RLR; front contacts 2RGPR, 1RGPR, coils RR, front contacts 3RGPR and 4RGPR, GRP relays repeat red position of signals and show that all home signals are red and approach signals yellow or red; back contacts of 3SR and 4SR check no train between signals 3 and 4 or in receding sections A3T or A4T, except receding train in A3T may reverse move by use of manual time release 3-4TE; back contact of 3ASR account of train being in A3T approach; normal contact of release 1-2TE assuring that release is in full normal position; to common. Some of the above contacts are used for changing polarity of relay RR and require open and closed contacts to prevent a short circuit.

US&S DIV. WABCO - SWISSVALE, PA. ALL RIGHTS RESERVED

It can be readily seen that a train on approach A4T would close this circuit with the same polarity as described above while a train in conflicting approaches will energize relay RR with opposite polarity. We have assumed that with the move we are describing relay RR will move its contacts to right.

There are other means of changing polarity on relay RR with front contacts of SR relays or by operating TE time releases that will be discussed further on.

Locking Relay "RLR"

The locking relay is slow-pickup slow-release, which prevents the loss of route by a momentary opening or loss of shunt of detector track circuits, and also delays the clearing of a conflicting signal after losing an approach cleared signal in event of loss of shunt on approach circuit.

Resuming our description of train movement, we notice that with a train in approach section A3T or A4T and approach relay 3ASR or 4ASR open and route relay "RR" set for a move on the other track with polar contacts to the left, relay RLR will stay energized through checking contacts of thermal time relays 1ATER and 2ATER, front contacts of approach relays 1ASR and 2ASR and track relays 3TR and 1TR. When relay RR shifts its polar contacts to the right, the control of RLR shifts to approach relays 3ASR and 4ASR, and as 3ASR is open RLR will be de-energized and open. This cuts energy off RR relay and closes circuit for clearing signal 3.

The front contacts of 3TR and 1TR prevent RLR from picking up and route relay RR from shifting with a train between home signals, but in this case the home signals cannot clear as they are also controlled over front contacts of track relays 3TR and 1TR.

Relay RLR may also be picked up by operating time release 1-2TE or 3-4TE, which feature we will discuss later.

Control of Signal 3:

With relays RLR and 3ASR de-energized and route relay RR with polar contacts closed to the right, the circuit is completed to clear signal 3. Lock relay RLR de-energized, insures that route relay RR is de-energized; approach relay 3ASR is de-energized by train ready to accept signal 3 and the polar relay to the right opens the controls of signals on the conflicting track. Other contacts in the circuit are front contact of 4ASR, showing no train in opposing approach section; normal contacts of time releases 1-2TE and 3-4TE, to show these timing devices are in normal positions and will take full time to operate when used; front contacts on 1RGPR and 2RGPR, checking that conflicting

US&S DIV. WABCO - SWISSVALE, PA. ALL RIGHTS RESERVED

are at stop; front contacts on track relays 1TR and 3TR, due to no trains between home signals; back contact of 4SR, to prevent a train moving from signal 4 clearing signal 3 when it passes this signal; and front contact of 4RGPR, checking opposing signal at danger.

Control Of Receding Stick Relay 3SR:

When signal 3 clears, relay 3RGPR opens and when the train passes the signal, and shunts track relay 3TR, the circuit is closed to pick up relay 3SR, through back contacts of 3TR and and 3RGPR. When relay 3SR picks up it closes a contact that bridges the back contact of 3RGPR so that when the signal 3 mechanism moves to red indication and 3RGPR picks up a holding circuit is closed, through back contact 3TR and front contact 3SR to hold 3SR up while train is in section 3T. When the train enters section A4T a second holding circuit is closed through back contact of 4ASR and front contact of 3RGPR. When the train clears section 3T relay 3SR will continue to hold through the last mentioned circuit and a circuit will be closed to pick up locking relay "RLR" including front contacts of 3SR, 4SR back, 3TR and 1TR, and polar contact of route selecting relay "RR" to the right.

With the above conditions it may be seen that the train in section A4T will not clear signal 4, on account of 3SR being picked up. Also a following train will not clear signal 3, as 4ASR is open. However, a train entering section AD1T (or AD2T) will complete a circuit to shift the contacts of "RR" to the left as follows: B, front contact of 3SR, front contacts of 4RGPR, 3RGPR, coils of RR, front contacts of 1RGPR, 2RGPR and RLR, back contact of 1SR, 2SR, and 1ASR, normal contact of time release 3-4TE to C. It may be noted that with 3SR or 4SR picked up the contacts of 3ASR and 4ASR are no longer in the control of relay RR and a train entering approach sections AD1T or AD2T will shift relay RLR and clear corresponding signal with either A3T or A4T or both occupied.

From the above it can be seen that a conflicting route cannot be established until the first train clears the detector circuit, and that with several trains in the approach sections routes will be established in the same sequence as trains enter the approach sections, except that with a train receding from the crossing, a conflicting train will have preference over a following train. Also if a train leaves its rear end in the approach section and the head end proceeds over the crossing, a conflicting train may pass between the two ends as soon as the head end passes the opposing home signal.

Train Backs Off Approach Section:

If, with the plant clear, a train enters section A3T and clears signal 3 as described above, and then backs off the approach section, approach relay 3ASR does not pick up due to front contacts

US&S DIV. WABCO - SWISSVALE, PA. ALL RIGHTS RESERVED

of relays 3SR and 4SR being open. A circuit is established to energize thermal time relay 3ATER through front contact of A3TR and back contact of 3ASR. When required time has elapsed to energize the thermal relay, a circuit will be closed to pick up relay 3ASR, which in turn de-energizes 3ATER. When 3ATER cools sufficiently to close normal checking contact, a route may be set up for conflicting movement if a train is occupying the approach section. It may be seen that when a train enters the approach section a conflicting route cannot be lined up until the first train either clears the detector circuit or backs off the approach section. The thermal relay is introduced in this circuit to prevent a route being changed by momentary loss of shunt.

It may be noted that the approach track relays for signals 1 and 2 are located some distance from the crossing so it is necessary to use repeater relays 1ASPR and 2ASPR in order to keep the circuit for the thermal relay within the central relay housing.

To Let Train Return Over Crossing By Use Of Release

Assume that a train has made a move from signal 3 over the crossing and has stopped beyond signal 4, and it is required for the train to return over the crossing. The polar relay is in proper position to make this move but signal 4 is prevented from clearing by 3SR being picked up and opening circuit 4G. By operating the time release 3-4TE, the common side of the 3SR circuit is opened and back contact 3SR closes, 3-4TE is restored to the normal position and signal 4 will clear if no train has entered section A3T.

To Change Routing By Manual Time Release:

Assume a train has entered section A3T, selected its route, and has cleared signal 3. Now a second train enters the approach section AD1T and it is desired to let the second train proceed over the crossing, holding the first train at signal 3. The box containing release 1-2TE is opened but indicator light 1-2E will not be lighted as relay 3RGPR is de-energized and the RR relay is in the wrong position. The time release handle is operated to the full reverse position winding up release. The handle is then released allowing the release to run down. (Release is of the unlatch type.)

When the release is moved from the normal position, the common connection to the 1SR and 2SR relays is opened, the purpose of which was described above; also the common connection to the RR relay is opened, the first step in changing polarity of this relay; and signal control circuit is opened so no signal will be cleared until release is restored to full normal position.

US&S DIV. WABCO - SWISSVALE, PA. ALL RIGHTS RESERVED

After release has run down to within 30 seconds of normal position, the midstroke (Y-Z) contacts make for twenty seconds closing a circuit to energize locking relay RLR, and also closing a circuit to change polarity of route relay RR. The latter circuit takes positive battery over a midstroke contact on 1-2TE mentioned above; over back contact of 3ASR, account of first train in A3T approach section; back contacts of SR relays, showing no trains in receding sections; front contacts of all RGPR relays, all signals being at stop indication; front contact of RLR, route relay energized for twenty seconds; back contact of 1ASR, second train in AD1T approach section; and normal contact of time release 3-4 TE to common. Ten seconds before time release is normal the midstroke contacts open and relay RLR releases, closing a back contact in signal control circuit, and circuit for reversing RR is opened at contact of release 1-2TE and front contact of RLR. The midstroke contacts on 1-2TE were closed twenty seconds, this being ample time to shift contacts of RR to left. When 1-2TE is completely run down a circuit is completed to clear signal 1, the control circuit including back contact of RLR, normal contact of 1-2TE, left contact of RR, and back contact of 1ASR which are on apparatus we have been discussing. The normal contact of 1-2TE in the RR circuit has again been connected to common which circuit now takes common at both ends and is also open at the front contact of RLR.

The light -1-2E time release housing is now lighted through back contacts 2SR and 1SR, door contact 1-2, time release normal contact 1-2TE, normal contacts 3RGPR and 4RGPR, left polar contact RR and front contacts of track relays 1TR and 3TR. If light 1-2E is illuminated and signal 1 fails to clear the trainman knows that the signals on the conflicting road are at stop and that it is safe to proceed over the crossing in accordance with the operating rules in effect at this point.

Route Interlocking

Route interlocking is a combination of the free lever type of control and automatic interlocking control. Here the route concept is embraced but the routes are set up by a minimum of lever manipulation. Usually a push button type of controller is operated at the entrance of a plant and a similar device is operated at the desired exit point. All switches are then automatically positioned and required signal or signals cleared to permit the desired movement through the plant in the most expeditious manner.

Advantages

Route control of interlockings (UR) has many advantages over the mechanical interlockings or unit lever (Free lever) interlocking. These advantages are simplicity of manipulation, economy of operators, economy of control machine space requirements, economy of maintenance and adaptability to consolidation

US&S DIV. WABCO - SWISSVALE, PA. ALL RIGHTS RESERVED

of interlocked groups.

Simplicity of operation minimizes the possibility of wrong routing, permits the operator to concentrate more fully on planning train movements, and where change in switch position is involved reduces time to make a line-up to but a few seconds and expedites train movements. In many cases the requirement for extra operators to handle train movements is reduced to the bare minimum as determined by an operator's mental capacity to handle such movements, and in certain other cases train directors may be dispensed with, thus resulting in an economy of personnel and their release for other duties.

The necessity of a radical change in the design of control machine was recognized. In order to realize the advantages of route type interlocking, it was visualized that the control machine would have to be smaller than conventional machines and in order to accomplish reduction in size it would be necessary to avoid controlling vital or safety circuits from the machine, substituting instead indirect control by non-vital circuits and relay equipment. Doing this permits smaller controllers to be used and thus a very much smaller control machine results. The space required for a route type control machine is considerably less than for the mechanically locked type interlocking machine or unit lever machine.

Relays have historically required less maintenance than most any item of signal material and as the route interlocking equipment, with the exception of the ground material, consists of only relay equipment and relay type contacts in the control machine, the maintenance required by mechanically locked type control machines is entirely eliminated.

Remote Control

Route interlocking control lends itself to remote operation because the system equipment may be simple, of small size and does not require safety circuits to be carried through the control machine, as outlined in the foregoing, permitting wire saving methods to be used between the field and control point. When we use the term "remote control" in signaling we imply that by controlling some point remotely we gain the advantage of being able to combine certain operations under the control of less personnel than required by local control. Thus remote control automatically becomes economically advantageous. Further, since route control permits a smaller number of lever manipulations per train movement than for unit lever control, even further saving in personnel is possible by remotely controlling interlockings.

The type of equipment and circuits used in route control is also adaptable to various types of non-vital communication facilities, such as, remote control by direct wire connection

US&S DIV. WABCO - SWISSVALE, PA. ALL RIGHTS RESERVED

where each wire may have a dual function, or code control where line wire or carrier circuits may be employed. The most economical arrangement is adopted only after thorough consideration is given to all means available.

Interlocking Consolidation

Consolidated remote control of an unlimited number of interlockings is thus possible which enables the savings of a number of control buildings together with their heating, lighting, and sanitary facilities. A larger area may be controlled by one operator and a further advantage is the fact that train movements are handled more expeditiously and efficiently due to having all information and control at one directing point.

The technology for achievement of interlocking consolidations has been developed to the extent that there are now virtually no limitations as to the amount of territory which can be controlled from a single station, insofar as the design and actual operation of signal and interlocking functions from a remote point are concerned. Any limiting factor in consolidation would be determined on the basis of whether the area to be controlled constitutes a reasonable grouping of related operating functions which can be effectively controlled from a central station from an operating standpoint and whether the cost of effecting the consolidation is economical from initial expenditure and operating expenditure standpoints.

Control Machine

The control machine in route interlocking control consists of a track model having a series of indication sections representing the track layout, push buttons at the entrances to all routes at the points where signals govern the train movements, push-turn levers for individual switch operation, and other buttons or toggle switches for maintainers call, snow melters, etc. Loud speaker or other communication equipment may be included. The track model extends from about 30 inches above the floor to a height necessary to accommodate the number of tracks involved. It is mounted in a cabinet of which it forms the front. A shelf or desk is mounted below the track model. The cabinet contains the necessary terminals for the exterior connections.

Front Panel

Attached sketches (a) to (j), show details of a portion of the front panel. There is but one button located at the route entrance. As both ends of all routes in an interlocking are governed by a signal, the exit to any route is past an opposing signal. Therefore, a button at each signal can serve as both an entrance and an exit button by suitable circuit design.

US&S DIV. WABCO - SWISSVALE, PA. ALL RIGHTS RESERVED

It may be easily visualized that the number of routes in any interlocking are greater than the number of entrance signals. For example in a double track layout with two cross-overs there would be two routes for each of the four signals which would mean a total of eight routes for the interlocking. By the use of one button in the dual capacity of entrance or exit, it will then be seen that only four buttons are required. Therefore, the ratio is eight to four in favor of using route control rather than one button per route. In a four track universal layout, 8 buttons, as against 32 in an individual button per route scheme, are required and these are located exactly at the entrances and exits where no searching for the desired buttons is required and the possibility of depressing the wrong button is at a minimum.

The track layout or model is made up of small glass sections, which when lighted white form a line representing the track route, and when red, indicate the portion of track occupied. Straight track, crossovers, turn-outs and derails may be so represented.

Adjacent to each push button is a small round lens which lights red or green to indicate whether the signal displays stop or proceed.

There is an individual switch control lever for each switch. These levers have three positions. During normal route operation these levers are not required and are left in the center position. The left and right positions are for manual normal and reverse control respectively. The individual manual control provides a means for testing, for breaking down obstructions in the switch points, lining up for motor cars, etc.

There are also other buttons which are used for closing in as previously mentioned for "call-on" control of each signal. These call-on buttons as well as the individual switch levers are usually located on the panel in relation to their respective functions on the track model.

Operation

The manipulation for UR operation is very simple as two push buttons operated in sequence set up a route and clear the signal. The route setup is indicated by a white illuminated line and occupied sections are indicated by a red illuminated line. After the operation of the entering route button, a red light appears at that button, thereby marking the entrance to the route and indicating that a route has been initiated but the signal has not yet cleared. A white light also appears in the last track section of each available route showing points to which a train may be routed. The operation of the second route button (at one of the indicated destinations) completes the route selection.

US&S DIV. WABCO - SWISSVALE, PA. ALL RIGHTS RESERVED

The lights marking other possible destinations go out. A flashing red light appears at each switch section when its switch is not in position for the route and this shows that the switch is in transit. When the flashing red changes to a steady white light, switches are in the desired position. Upon the completion of the route, a white line of light is completed from entrance to exit indicating that the route is set up and that is is locked. The signal indication lamp will then change from red to green to indicate that the wayside signal is at proceed.

When a train accepts the signal, the white line for the first track section will change to red to show the train's location. The remaining lights in the route for track sections ahead of the train remain lighted white. After the train leaves each track section, that track section will be dark. Also when the train passes the signal, the signal will be placed at stop and the signal indication will become dark.

An occupied route may be re-established for a call-on move by again operating the first and second route buttons. The call-on control is effected by the operation of the call-on button after the route setup is completed.

Any attempt to set up a conflicting route cannot disturb a route once established or any part of an occupied route.

The attempt to establish or store any route which involves a change in the position of a switch or crossover detector or route locked is prevented by electric locking in the switch selection and locking circuits.

When the individual control levers are out of their center positions, manipulation by route buttons cannot change the switch position. Also, if an attempt is made to operate a switch by means of the individual control lever while the switch is locked, the switch will remain locked in its existing position until the lever is returned to its center position. Thus a control for a different position of a switch cannot be stored while the switch is electrically locked. However, switches may be lined by their individual levers and routes set up, by means of the route buttons, over the preset positions.

Other Features

Some other features of operation which may be included are as follows: Manual or automatic cancellation of a route, "through routing", "fleeting" or "stick-non-stick" signal control, preference and alternate routing over parallel routes. Manual cancellation of a route is accomplished by the operator pulling out the button which was depressed at the route entrance. This causes the signal to be restored to stop, the red signal indication to become dark and after the release of any approach or time locking

US&S DIV. WABCO - SWISSVALE, PA. ALL RIGHTS RESERVED

the white route lights become dark.

Automatic canellation is provided by arranging the circuits to duplicate the manual cancellation when a train passes over the route. In this way the operator does not have to make a manipulation after each train movement, no restoration manipulation being required. Therefore, he can give his entire attention to other moves after he has once set up a route.

"Through route" control may be provided past intermediate signals in complete routes. The operator may elect to push the buttons only at the extreme limits of the route and need not push the button at intermediate signals. Proper arrangment of the circuits causes action similar to that which would occur if the operator had pressed the intermediate signal button first as an exit and then as an entrance.

"Fleeting" or "non-stick" signal control is provided by pushing and turning the entrance button in the direction of the desired train movement, thereby the signal will function as an automatic signal and will reclear after the passage of each train. With this control, a particular section of the control machine can be left unattended during periods when no swithing moves are required. While this arrangement relieves the operator from manipulation of the machine for sucessive train movements over the same route in an isolated interlocking, the advantage in a consolidation of interlockings reaches great proportions in that crossover moves at many of them are infrequent and thus manipulation is required only at such points where sucessive changes in routes may be involved.

Preference and alternate routing are involved in cases where a given route may be possible over two or more alternative paths. In every case the preferred route would be that which would tie up the least amount of the interlocking. If one path is locked in the wrong position for the preferred route then the alternate route would automatically be selected. This is accomplished by proper arrangement of the non-vital route selection circuits.

Example Of Train Movement

The appearance of the panel in various phases of manipulation and train movement will now be shown in the series of sketches (a) to (j).

In sketch view (a) the panel is completely dark with no entrance buttons pushed and no trains in the vicinity of the interlocking.

In view (b) the appearance of the panel, immediately after button 12 has been depressed, is shown with signal 12 indication lamp red and available exits at 2, 4, and 6 lighted white.

View (c) shows the appearance of the panel, immediately after

US&S DIV. WABCO - SWISSVALE, PA. ALL RIGHTS RESERVED

the exit has been established by pushing button 4. The sections of light at 2 and 6 go dark and the section of light at signal 12 becomes illuminated white, the indication light of signal 12 stays red, while the reverse or diagonal section of light at crossover 1 flashes red, indicating that the crossover is moving to its reverse position.

View (d) shows the appearance of the panel after crossover 1 reverses. All of the sections of light in the route are white and signal 12 is indicated clear by a green light instead of a red light. Also, a train has occupied the approach to signal 12 as indicated by this red section.

In view (e) shows that the train has passed signal 12 causing the signal indication light at 12 to be darkened and the sections for the track circuit between 12 and 8 to become red.

In view (f) the track circuit between 2 and 8 has been occupied as the train proceeds causing this area to become red. The train has left the section in approach to signal 12 and this section becomes dark.

In view (g) the train has receded from the track section between 12 and 8 causing this area to become dark and is occupying only the track circuits between 4 and 8, and causing this area to become red.

In view (h) the train has proceeded farther and has entered the track circuit in approach to signal 4 causing this section to become red.

In view (i) the train has receded from the track circuit between 2 and 8 causing this area to become dark.

In view (j) the train has receded from the track circuit between 4 and 10 causing this area to become dark. The next appearance of the panel would be dark, as on slide 4 view (a), as the train leaves the track circuit in approach to signal 4.

Switch Control

In route interlocking, a normal position of a switch is usually designated as a matter of convenience for reference purposes. However, in actual practice, a switch or crossover remains in the position of its last use. This is on the basis that each new route set up will move only those switches required in that particular route. The return of each switch to a so-called "normal" position, after completion of a train movement, would result in a great deal of extra power being wasted in moving each switch back to its "normal" position when the next route may not go over such switch or it may be over the last used switch position.

US&S DIV. WABCO - SWISSVALE, PA. ALL RIGHTS RESERVED

In any interlocking there are certain features or elements which must be included regardless of the method of control. Therefore, we would find, as expected, a signal control network, approach or time locking, route locking, switch locking and such other safety controls as are necessary.

US&S DIV. WABCO - SWISSVALE, PA. ALL RIGHTS RESERVED

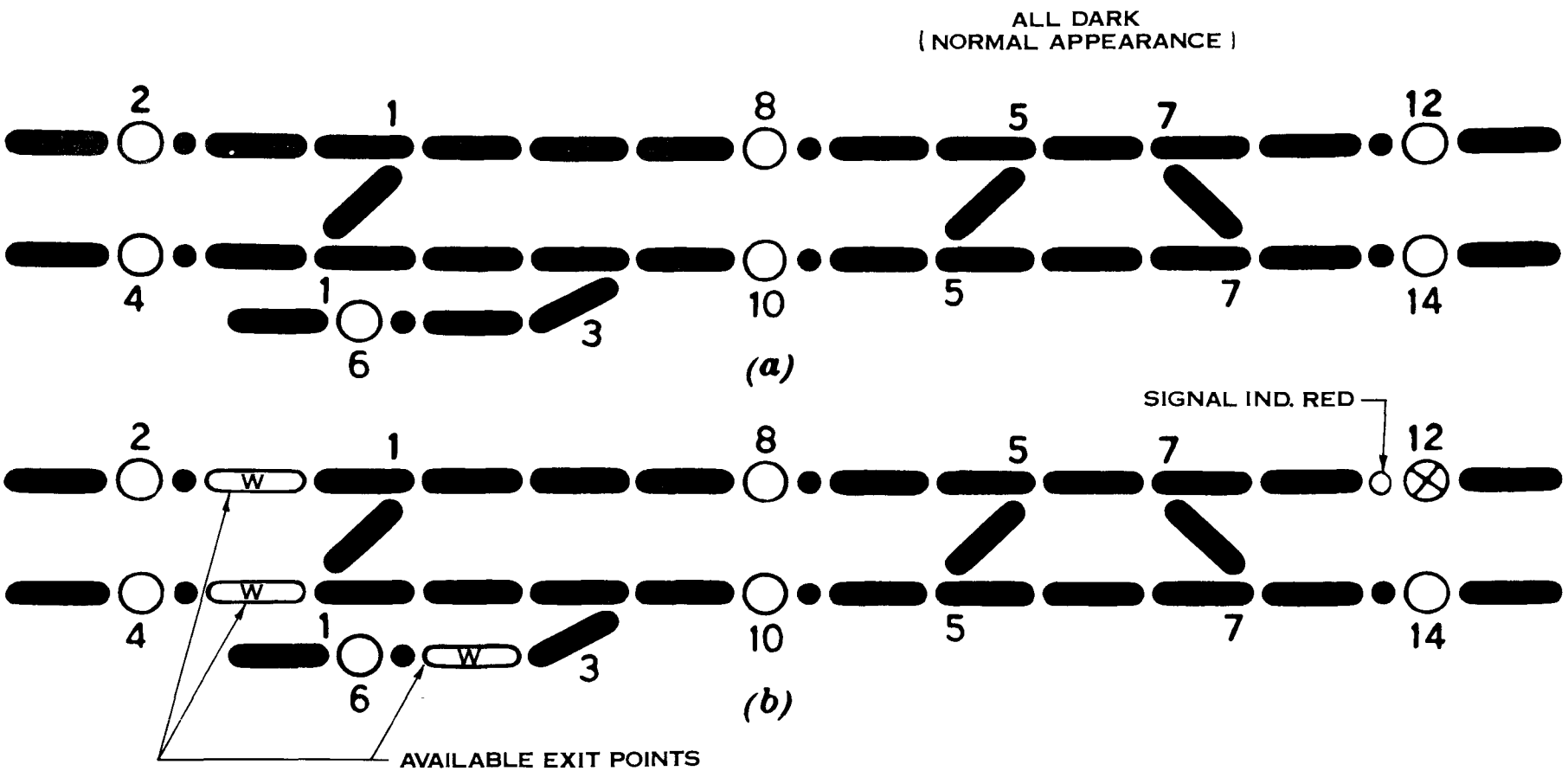
ALL DARK
(NORMAL APPEARANCE)
2
1
8
5
7
12
4
1
10
5
7
14
6
3
(a)
SIGNAL IND. RED
W
W
W
AVAILABLE EXIT POINTS
(b)

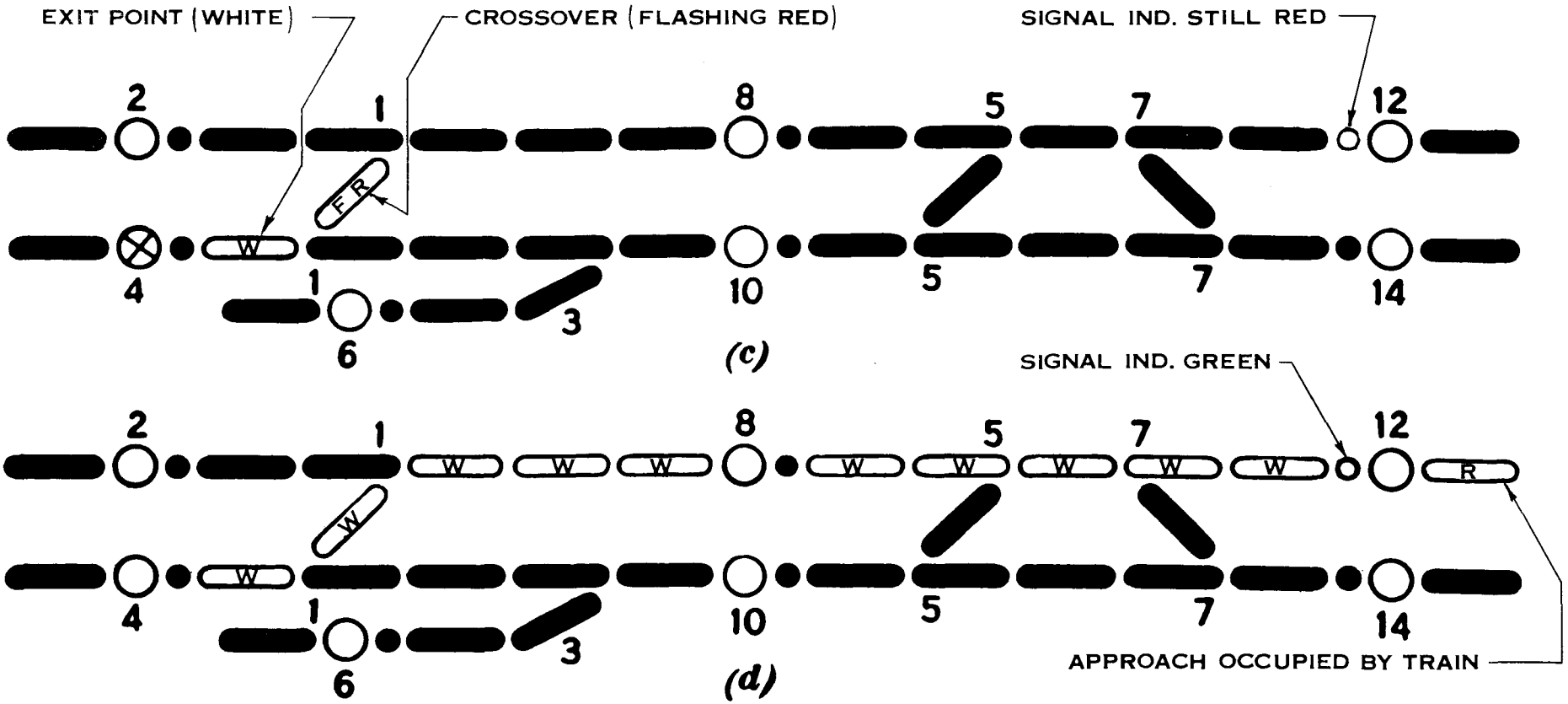

SIGNAL 12 CLEAR AND ROUTE LINED TO SIGNAL 4 WHITE

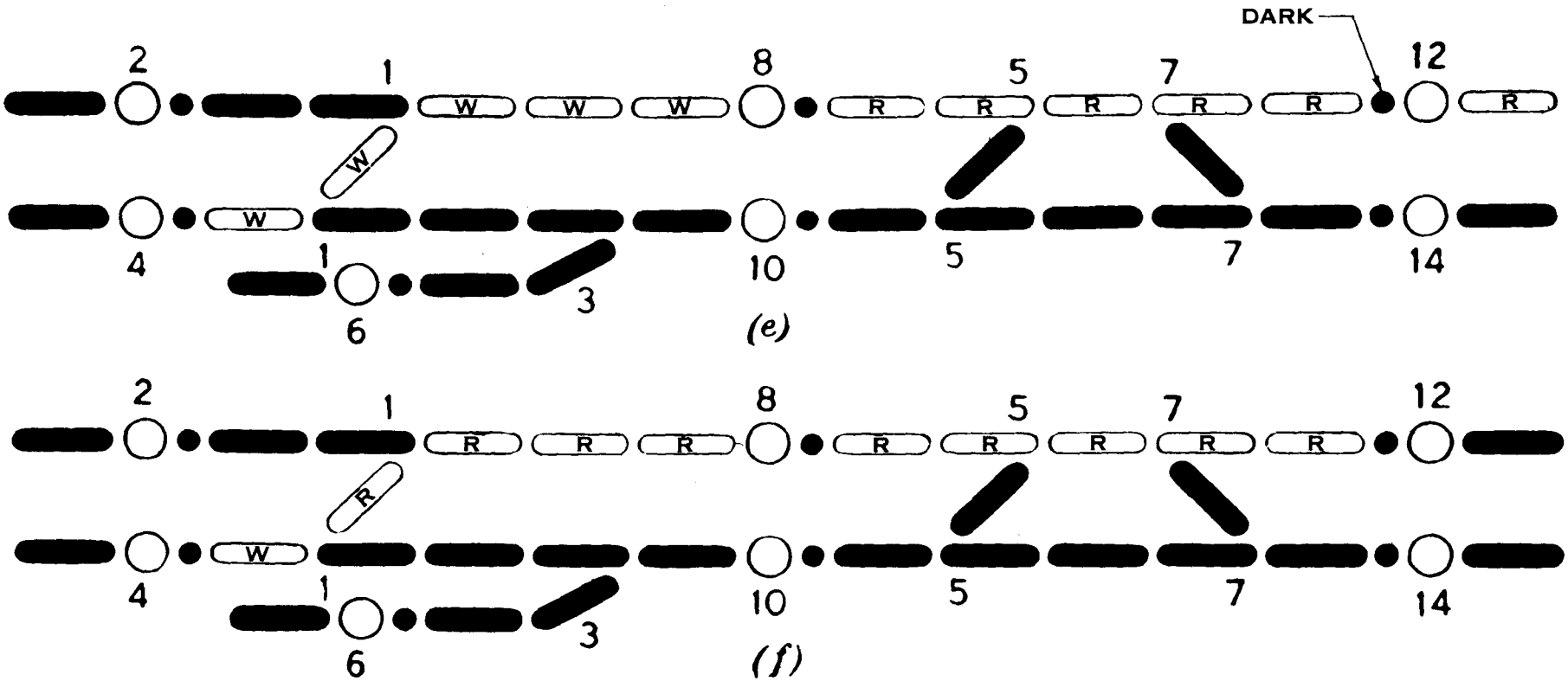
DARK
2
1
8
5
7
12
W
W
W
R
R
R
R
R
R
W
W
4
1
10
5
7
14
3
6
(e)
2
1
8
5
7
12
R
R
R
R
R
R
R
R
W
4
1
10
5
7
14
3
6
(f)

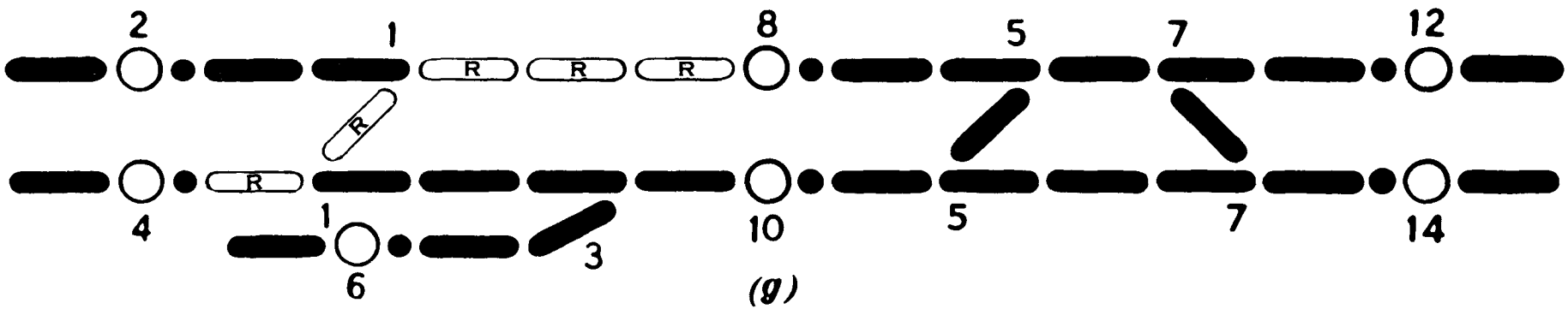

(g)

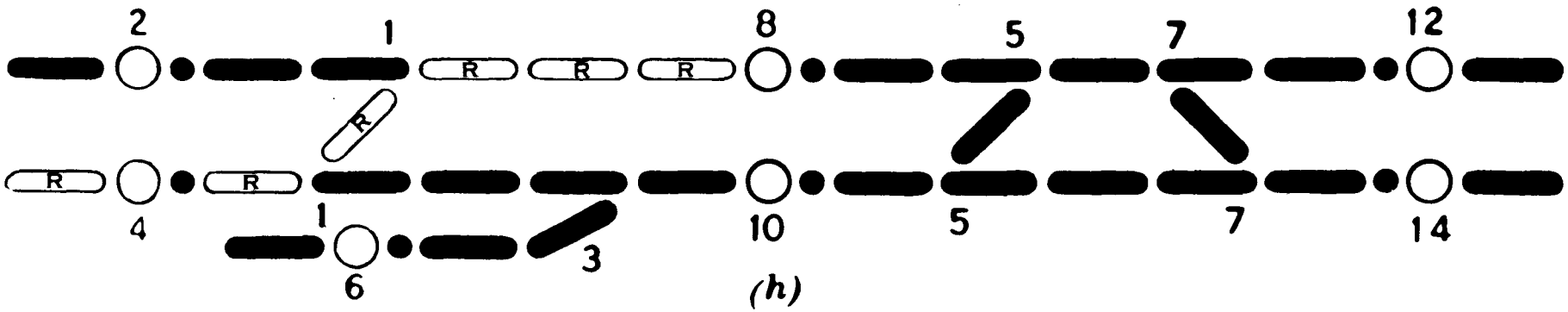

(h)

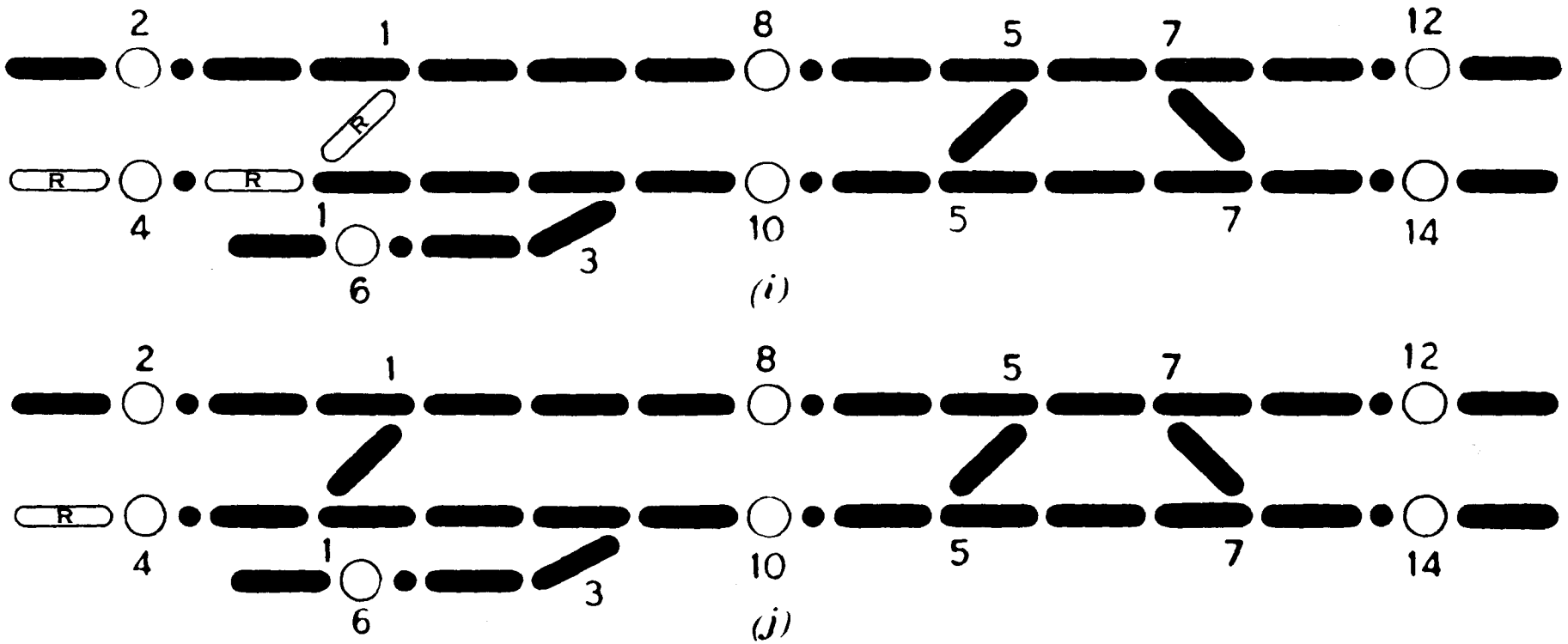
2
1
8
5
7
12
R
R
R
4
1
10
5
7
14
6
3
(i)
2
1
8
5
7
12
R
4
1
10
5
7
14
6
3
(j)

CHAPTER IX - VITAL VS. NON-VITAL

So far in our discussions we have talked about various ways of accomplishing controls of signaling systems. These arrangements have all been based on the use of what is called "safety" or "vital" circuits. It is appropriate, therefore, at this time to discuss the use of the terms vital and non-vital as applied to railway signaling as well as the much used term "fail safe."

Vital circuits are those whose operation directly affect the safety of train movements. Non-vital circuits are circuits auxiliary to vital circuits and of such nature that their failure would not create an unsafe condition. Examples of vital circuits are control circuits for switch machines and signals and circuits for checking that various components operated as intended. Non-vital circuits are used in data transmission including code control of functions and the indication thereof.

Much of the vital nature of signaling devices is built into the devices by design. A great amount of design and development, for instance, has been expended on relay contacts for use in vital circuitry. Prior to the use of carbon contacts, silver and platinum front contacts had fused (welded and locked) from lightning or from an abnormal flow of foreign current and caused false clear signal failures. Carbon only and carbon-plated front contacts were introduced just prior to the fall of 1900 to prevent false clear signal failures. For nine years prior to 1906, signal and railroad companies expended considerable research and field experimentation to preclude false clear signal failures.

The initial A.A.R. relay specification was issued in 1906. Prior to the first relay specification, contacts were associated with circuits.

Carbon front contacts were supplemented by lightning arresters which took care of heavy discharges, and by 1/2 to 4 ampere fuses to protect against heavy lightning currents. Air and iron core choke coils were connected in series with the front contacts. The selection of the right supplementary contact protection was a part of the total research and field testing. Because of the high incidence of signal failures, fuses were finally discarded. Silver or platinum-plated carbon was used to reduce contact resistance, but plating was dropped in the 1912 A.A.R. relay specification.

Fail-Safe

The characteristic of a system which ensures that any malfunction affecting safety will cause the system to revert to a state that is known to be safe is called "fail-safe." In railway signaling

 ALL RIGHTS RESERVED

passenger and train safety is the paramount design consideration. Whenever an unsafe condition could develop from an equipment failure or a procedural error, fail-safe design techniques shall be used to prevent the occurrence of the unsafe condition.

Whenever an equipment failure, human error or failure to act, external influence such as high or low temperatures, or other adverse conditions affect the proper operation of a system involved with the safety of life or property, that system shall revert to a state known to be safe.

Failure in a circuit or equipment which results in a restrictive indication, whether or not there is actual danger, is considered to have occured in a fail-safe manner. Conversely, a failure which results in an indication of a safe or non-restrictive condition when, in fact, a dangerous condition may exist, shall not have met the fail-safe requirement.

Design must be based on principles which permit the attainment of fail-safe operation in all known failure modes. It must minimize the possibility of unsafe failures arising from procedural errors and neglect, including:

(1) Careless adjustment of equipment and controls.

(2) Removal of components and assemblies.

(3) Incorrect assembly of equipment.

(4) Incorrect computer program input.

(5) Insufficient maintenance in all categories.

Equipment failures which must be considered in producting a fail-safe design are:

(1) Relays (non-vital) - Open coil, fused contacts, high contact resistance, shorted coil, sticking of armature, and broken springs.

(2) Relays (vital or safety-type) - Open coil, shorted coil, and high contact resistance.

(3) Transformers - Open primary, open secondary, shorted turns, primary to secondary shorts, and combinations of the foregoing.

(4) Capacitors - Shorts, opens, and leakage.

(5) Resistors - Increase and decrease in resistance.

(6) Transistor - Shorts, opens, leakage, and loss of beta.

US&S DIV. WABCO - SWISSVALE, PA. ALL RIGHTS RESERVED

(7) Diodes and other similar devices - Shorts, opens, and reverse leakage.

(8) Coil - Open and shorted turns.

(9) Loss and degradation of power sources.

(10) Abnormal signal levels, frequencies, and delays.

(11) Effect of electrical interference.

(12) Absent and abnormal input signal.

(13) Opens and shorts in internal circuitry at input and at output.

(14) Mechanical vibration and shock.

(15) Drift and instability of amplifiers, receivers, transmitters, oscillators, switching circuits, and power supplies.

(16) Deterioration of contacts, connectors, terminals, solder connection, printed circuits, circuit adjusting devices, and mechanical devices.

(17) Intermittent opening and closing on energy supply.

Failure Mode Analysis

In order to insure that a design is properly fail-safe, a failure mode analysis must be made. Such an analysis must consider all modes by which the component or system might fail and must predict the logical consequences of each failure, showing that each individual failure and combination of failures is safe. Procedures to ensure that adequate failure mode analyses are made on components, assemblies, systems and operating procedures affecting safety must be prescribed to account for any deficiency in design or failure of equipment outlined above.

Reliability

Reliability is an important feature of signal circuit and equipment design. This is a large part of what the customer pays for and historically has been a basic attribute of our products. A number of expressions and ratios conveying reliability are given below.

Mean Time Between Failure (MTBF) -

$$MTBF = \frac{\text{Operating Hours}}{\text{Number of Failures}}$$

US&S DIV. WABCO - SWISSVALE, PA. ALL RIGHTS RESERVED

Mean Cycle Between Failure (MCBF) -

$$MCBF = \frac{\text{Operating Cycles}}{\text{Number of Failures}}$$

Time Availability Ratio -

$$\text{Availability} = \frac{MTBF}{MTBF + MTTR}$$

MTTR = Mean time to restore equipment to operating status following a failure.

An interesting and quite comprehensive dissertation on fail-safe operation prepared by the U.S. & S. Research and Engineering Department is included in this chapter.

FAIL-SAFE OPERATION

Introduction

If the minimum degree of acceptable system "unsafety" is based upon a parameter known as the fail-safe ratio, (number of hazardous system failures number of total system failures) then it can be shown that maintaining the specified fail-safe ratio does not guarantee an absolute measure of system safety. The fail-safe ratio is, in fact, not an independent measure of system safety, but rather a measure of system safety--given a constant reliability.

Definition Of Symbols

O_t = Total number of system operations (correct operations and failures) per given time period.

C_t = Total number of correct system operations per given time period.

F_t = Total number of system failures (safe and hazardous) per given time period.

F_s = Number of safe system failures per given time period.

F_h = Number of hazardous system failures per given time period.

Relations

Note the following relations hold among the above:

(1) $O_t = C_t + F_t$

(2) $F_t = F_s + F_h$

US&S DIV. WABCO - SWISSVALE, PA. ALL RIGHTS RESERVED

Relations - Continued

(3) $O_t = C_t + F_s + F_h$

(4) $\frac{C_t}{O_t} = f_r$

(5) $(1 - f_r) = \frac{O_t - C_t}{O_t} = \frac{F_t}{O_t} = f_{ur}$ Unreliability Factor

(6) $\frac{F_h}{F_t} = f_{fs}$ Fail-Safe Ratio

(7) $\frac{F_h}{O_t} = f_{us}$ Unsafety Factor

(8) $(1 - f_{us}) = \frac{O_t - F_h}{O_t} = f_s$ Safety Factor

Analysis Of Safety Specifications

If the minimum degree of acceptable system "unsafety" is based upon the fail-safe ratio (f_{fs}), then it can be shown the total number of hazardous failures per given time period is given by:

$$O_t \quad \frac{(F_t)}{(O_t)} \quad \frac{(F_h)}{(F_t)} = F_h \text{ or}$$

(9) $O_t \cdot f_{ur} \cdot f_{fs} = F_h$

Now if we fix O_t as "the maximum number of total system operations possible in one year," and we also fix f_r and f_{fs}, then the maximum number of hazardous failures per year will be fixed. As specified to date:

$f_r = .999$

$f_{ur} = .001$

$f_{fs} = .0001$

Therefore:

(10) $F_h = O_t\ (.001)\ (.0001) = O_t\ (.0000001) = O_t \cdot 10^{-7}$

In a system with ninety-second headway, 75 miles of double track, and a train control device (one which could affect train safety) every 1,000 ft.; we can estimate the value of O_t as follows:

US&S DIV. WABCO - SWISSVALE, PA. ALL RIGHTS RESERVED

	5280	Feet Per Mile
x	150	Miles of Single Track
=	792,000	Feet of Single Track
÷	1,000	Feet Per Device
=	792	Devices
≒	800	Devices

At ninety-second headway, each device will operate once every ninety seconds; therefore, the number of operations per device per year is:

	3600	Seconds Per Hour
x	24	Hours Per Day
x	365	Days Per Year
=	31,536,000	Seconds Per Year
÷	90	Seconds Per Operation Per Device
=	350,400	Operations Per Year Per Device
x	800	Devices
=	280,320,000	Operations Per Year
≒	2.8×10^8	Operations Per Year

Since O_t equals the total number of system operations per given time period, and we have chosen this time period as one year, then:

$$O_t = 2.8 \times 10^8$$

Therefore, (10) becomes:

$$F_h = (2.8 \times 10^8)(10^{-7}) = 2.8 \times 10 = 28$$ Maximum Hazardous Failures/Year

It should be noted from (9), however, that F_h is directly proportional to the "unreliability" factor (f_{ur}). Therefore, although the fail-safe ratio remains constant, should the reliability drop 1%, the maximum number of hazardous failures would increase as follows:

$$(1\%)\ (.999) = .00999$$

$$.999 - .00999 = .989 = f_r \text{ (new)}$$

US&S DIV. WABCO - SWISSVALE, PA. ALL RIGHTS RESERVED

$f_{ur} = .011$ (new)

$f_{fs} = .0001$ (same)

$O_t = 2.8 \times 10^8$ (same)

Therefore:

$$F_h = f_{ur} \cdot f_{fs} \cdot O_t$$

$$= (.011)\ (.0001)\ (2.8 \times 10^8)$$

$$= (1.1 \times 10^{-6})\ (2.8 \times 10^8) = 3.08 \times 10^2$$

$$= 308 \text{ Maximum Hazardous Failures/Year}$$

The general result of the above can be expressed as the "change in F_h per unit change in f_{ur}" or,

$$\frac{dF_h}{df_{ur}} = f_{fs} \cdot O_t$$

$$\frac{dF_h}{df_{ur}} = (10^{-4})\ (2.8 \times 10^8) = 2.8 \times 10^4$$

To obtain "change in F_h per % change in f_{ur}", we write:

$$.01\frac{dF_h}{df_{ur}} = 2.8 \times 10^2 = 280$$

Conclusion

If we define, instead, a safety factor (f_s) according to equation (8), then the maximum number of hazardous failures per year becomes:

$$F_h = \frac{(F_h)}{(O_t)} \cdot O_t$$

$$(11) \qquad F_h = f_{us} \cdot O_t$$

Which is independent of reliability. In order to meet the "unsafety" limitations implied by the values $f_{ur} = .001$, $f_{fs} = .0001$; i.e., a possible twenty-eight hazardous failures per year at maximum system capacity, we would have to set f_s as follows:

US&S DIV. WABCO - SWISSVALE, PA. ALL RIGHTS RESERVED

Conclusions - Continued

$$28 = f_{us} \cdot O_t$$

$$\frac{28}{2.8 \times 10^8} = f_{us}$$

$$10^{-7} = f_{us}$$

$$(1 - f_{us}) = f_s = .9999999$$

$$f_s = .99999999$$

This value is not unrealistic. In fact, the attached safety statistics show that a slightly higher safety factor has been consistently maintained by U.S. & S. rapid transit system equipment.

Note

The safety factor f_s, presented in the tabulations to follow, is defined in the preceding text. It is realized, however, that when dealing with devices which contain solid state circuit and other non-mechanical elements, the failure point is not, in general, determined by the number of operations. A redefinition of f_s in terms of "# safe hours operation ÷ # total hours operation" or "# safe passenger miles ÷ # total passenger miles" is usually necessary when working with devices with unusual failure characteristics. With this in mind, it was necessary to find some method of expressing the f_s factor so that single devices containing a variety of circuit equipment (solid state, mechanical, pneumatic, etc.) could be assigned a single meaningful safety rating.

It was decided that if a "standard safety factor" of such hybrid devices were evaluated under conditions of maximum possible constant use, then the definition "# safe operation ÷ # total operations" would be equatable to the alternate definitions given above and there would be no need to attempt estimating operational frequencies under less than maximum possible use. This is so since any solid state device operated at a constant rate maintains a constant number of operations per hour; hence, "total number of oerations before failure" implies "total elapsed time before failure."

It was with this procedure in mind that O_t, in the preceding text, was set for the total maximum operating capacity of the SF-BARTD Rapid Transit System.

US&S DIV. WABCO - SWISSVALE, PA. ALL RIGHTS RESERVED

STATISTICAL TABLES
OF
RELIABILITY AND SAFETY

The following tables clearly define the reliability and safety performance limits that can be expected from present day railroad signal installations.

Particular attention is directed to the tables applicable to Class I Railroads where the reliability and safety factors are not influenced by the existence of a back-up, redundant system such as a trip-stop installation.

In the cases studied where an independent back-up protection system (fail-safe redundancy) is present on a rapid transit property, the safety factor has been found to be essentially 100%.

The reliability of a typical rapid transit installation is tabulated in Table E.

US&S DIV. WABCO - SWISSVALE, PA. ALL RIGHTS RESERVED

TABLE A

CLASS I RAILROAD MILEAGE OPERATED

Year	Freight . 10^3	Passenger . 10^3	Total . 10^3
1964	414,930	183,557	598,487
1963	399,897	189,312	589,209
1962	393,346	193,211	586,557
1961	386,410	198,443	584,853
1960	404,464	209,367	613,831
1959	414,134	225,045	639,179
1958	400,420	246,402	646,822
1957	446,733	274,789	721,522
1956	475,561	289,866	765,427
1955	476,444	298,838	775,282
1954	447,122	317,141	764,263
1953	492,409	333,128	825,537
1952	502,891	344,468	847,359
1951	528,573	355,128	883,701
1950	514,971	357,545	872,516

SOURCE: Railroad Transportation, A Statistical Record Association of American Railroads, Bureau of Railway Economics - Washington, D.C., April 1965

US&S DIV. WABCO - SWISSVALE, PA. ALL RIGHTS RESERVED

TABLE B

CLASS I RAILROAD SIGNALING OPERATIONS

Year	Total Mileage		Total Operations (O_t)
1964	598,487,000	x .75 x .5 x 4 =	897,730,500
1963	589,209,000	x .75 x .5 x 4 =	883,813,500
1962	586,557,000	x .75 x .5 x 4 =	879,835,500
1961	584,853,000	x .75 x .5 x 4 =	877,279,500
1960	613,831,000	x .75 x .5 x 4 =	920,746,500
1959	639,179,000	x .75 x .5 x 4 =	958,768,500
1958	646,822,000	x .75 x .5 x 4 =	970.233,000
1957	721,522,000	x .75 x .5 x 4 =	1,082,283,000
1956	765,427,000	x .75 x .5 x 4 =	1,148,140,500
1955	775,282,000	x .75 x .5 x 4 =	1,162,923,000
1954	764,263,000	x .75 x .5 x 4 =	1,146,394,500
1953	825,537,000	x .75 x .5 x 4 =	1,238,305,500
1952	847,359,000	x .75 x .5 x 4 =	1,271,038,500
1951	883,701,000	x .75 x .5 x 4 =	1,325,551,500
1950	872,516,000	x .75 x .5 x 4 =	1,308,774,000

ASSUMPTION:

(a) One signal every two miles.
(b) 75% railroad mileage operated is over signal-protected territory.
(c) Train passing a signal develops four signal operations:

(1) One operation per track circuit
(2) One operation per switch position
(3) One operation per automatic stop
(4) One operation per signal control relay

US&S DIV. WABCO - SWISSVALE, PA. ALL RIGHTS RESERVED

TABLE C

CLASS I RAILROAD SIGNAL FAILURES

Year	F_s Safe Failures	F_h Hazardous Failures & Potential Hazardous Failures	F_t Total Failures
1964	28,456	67	28,523
1963	27,173	79	27,252
1962	27,047	68	27,115
1961	23,884	63	23,947
1960	25,625	84	25,709
1959	25,590	67	25,657
1958	25,299	72	25,371
1957	28,065	74	28,139
1956	29,761	76	29,837
1955	27,371	70	27,441
1954	27,865	69	27,934
1953	29,509	109	29,618
1952	32,885	119	33,004
1951	33,758	140	33,898
1950	32,918	143	33,061

SOURCE: Annual Report of the Section of Railroad Safety Bureau of Safety and Service to the Interstate Commerce Commission

US&S DIV. WABCO - SWISSVALE, PA. ALL RIGHTS RESERVED

TABLE D

CLASS I RAILROAD RELIABILITY AND SAFETY

Year	Safe Operations[1]	Correct Operations[2]	Reliability[3]	Safety[4]
1964	897,730,433	897,701,977	.99 996 822 7	.99 999 992 5
1963	883,813,421	883,786,248	.99 996 916 5	.99 999 991 0
1962	879,835,432	879,808,385	.99 996 918 1	.99 999 992 2
1961	877,279,437	877,255,553	.99 997 270 3	.99 999 992 8
1960	920,746,416	920,720,791	.99 997 207 8	.99 999 990 8
1959	958,768,433	958,742,843	.99 997 323 9	.99 999 993 0
1958	970,232,928	970,207,629	.99 997 385 0	.99 999 992 5
1957	1,082,282,926	1,082,254,861	.99 997 400 0	.99 999 993 1
1956	1,148,140,424	1,148,110,663	.99 997 401 2	.99 999 993 3
1955	1,162,922,930	1,162,895,559	.99 997 640 3	.99 999 993 9
1954	1,146,394,431	1,146,366,566	.99 997 563 3	.99 999 993 9
1953	1,238,305,391	1,238,275,882	.99 997 608 1	.99 999 991 1
1952	1,271,038,381	1,271,005,496	.99 997 403 3	.99 999 990 6
1951	1,325,551,360	1,325,517,602	.99 997 442 7	.99 999 989 4
1950	1,308,773,857	1,308,740,939	.99 997 473 8	.99 999 989 0

1. Safe Operations = $(O_t - F_h)$
2. Correct Operations = C_t
3. Reliability = $(C_t \div O_t)$
4. Safety = $(O_t - F_h) \div O_t$

US&S DIV. WABCO - SWISSVALE, PA. ALL RIGHTS RESERVED

TABLE C

TYPICAL RAPID TRANSIT INSTALLATION

(U. S. & S. EQUIPMENT)

Year	(Col. 1) Failures Attributable to Electro-Pneumatic Equipment (Switches-Train Stops)	(Col. 2) Failures Attributable to Signal Equipment Relays-Signals-Circuits)	(Col. 3) Total (Col.1 + Col.2)	(Col. 4) Total Signal Operations (All Equipment)*	(Col. 5) Reliability (Col.4 - Col.3) (Col. 4)
1962	--	--	107	637,924,671	99.999 9832 %
1961	5	25	30	636,882,108	99.999 9954 %
1960	30	44	74	630,000,000 (est.)	99.999 9883 %
1959	42	41	83	630,000,000 (est.)	99.999 9868 %
1958	45	34	79	630,000,000 (est.)	99.999 9874 %
1957	2	2	4	616,938,744	99.999 9993 %

(*) Basis for Signal Operation (a train passing a signal develops 4 signal operations):

One operation per track circuit
One operation per switch position
One operation per automatic stop operation.
One operation per signal control relay.

US&S DIV. WABCO - SWISSVALE, PA. ALL RIGHTS RESERVED

CHAPTER X - REMOTE CONTROL INTERLOCKING

Not until after the development of relay interlockings was it economically feasible to remote control interlockings. The development of relay interlockings made it possible to eliminate the mechanical (physical) locking of the control levers which was required to enforce a predetermined order of lever operation. In relay interlocking, the functions are locked by means of the interconnection of electrical circuits; this enforces the functions to operate in a predetermined order. The circuit controlling devices are free to be operated at any time without impairing the safety of train operation.

The removal of mechanical locking permitted the use of a very compact control machine. As a result, less space is required to house the control machine. The status display boards were made more compact during the time the relay interlocking was being developed. This permitted the status display of more railroad territory.

A more compact machine, and a display board showing the status of more railroad territory, increased the capabilities of the operator. As a result, more interlocking can be placed under the control of one operator.

The development of code systems (data transmission systems) permitted greater distances for remote control of interlockings. A fall-out of relay interlocking development brought about two standards in circuit design. (See Figure I - the vital (fail-safe) and non-vital).

(1) The interlocking functions which are electrically interlocked and affect directly the safety of train operation, employ vital (fail-safe) circuits and equipment.

(2) The function which affects the supervision of train movements, such as the control machine, display, and data transmission, employ non-vital circuits and equipment.

The significance of the difference in the functions of standard (1) and (2) lies in the fact that while standard (2) passes information which requests movements, standard (1) ensures that the requested movements will be executed to produce a safe movement of a train or a track switch.

It can be seen that a great economy can be brought about by the proper use of the standards.

 ALL RIGHTS RESERVED

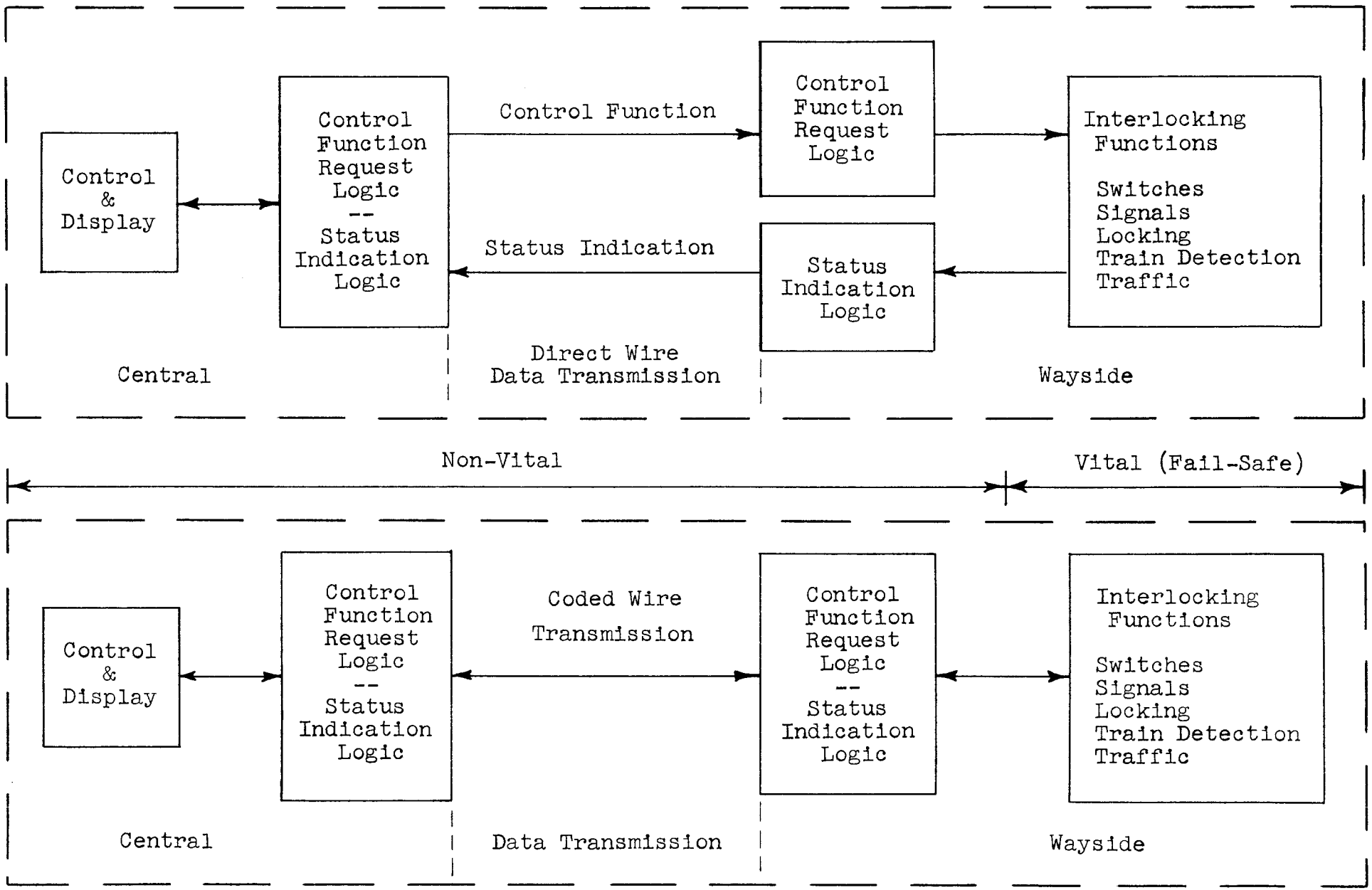

Figure I

Data Transmission

PRINCIPLES OF RAILROAD OPERATION AND RAILWAY SIGNALING

CHAPTER XII - AUTOMATIC TRAIN CONTROL

Introduction:

Automatic train control, in its broadest sense, implies the use of apparatus to automatically stop a train, or to control its speed, without intervention by the engineman, and is effective only when those entrusted with the operation of the train do not take proper action.

The development of the automatic air brake system made stopping a train by some roadway device relatively simple. With this system a pipe, called the brake pipe, is carried continously from locomotive to each car, flexibly coupled between cars, and is charged from the locomotive brake valve with compressed air at pressures varying between 70 and 110 pounds per square inch depending upon the type of train service. When the brake pipe is fully charged certain valves on the locomotive and each car are conditioned to effect release of the brakes on the locomotive and cars. Conversely, a reduction of the air pressure in the brake pipe causes the valves to be positioned to admit air into the brake cylinders to apply the brakes.

One of the earliest train stop systems was the plain mechanical type with which a cock or valve connected to a branch in the brake pipe came in contact with the roadside device, located in the immediate vicinity of the wayside signal, when the signal indication was less favorable than proceed, thereby opening the cock or valve to vent brake pipe air and apply the train brakes. When the signal displayed "proceed" the roadside element was automatically retracted by mechanism associated with the wayside signal. Some of the first practical tests were made with a device of this general type in the early 1890's and development of other types followed.

The first permanent installation was of the plain mechanical trip type on the Boston Elevated in 1900 made by the U.S. & S. Co. This type was later used on the Philadelphia Rapid Transit, Hudson & Manhattan, the Interborough of N.Y. and the elevated railroads of Chicago.

The work of investigating the merits of the systems available at the time had been done voluntarily by the transportation interests involved, and by agreement between these interests and the owners of the various devices. In 1906 Congress instructed the I.C.C. to investigate the subject of automatic train control, and as a result The Block Signal and Train Control Board, composed of prominent engineers having a knowledge of the subject, was appointed to make these investigations acting under the authority of the Interstate Commerce Commission.

 ALL RIGHTS RESERVED

The Transportation Act of 1920 gave the Commission authority to order the installation of train control after proper investigation. In January, 1922, an order was issued by the Commission requiring 49 railroads to show cause why they should not install train control on a complete passenger division.

On January 14, 1924, the Commission issued another order citing 47 of the original 49 roads upon which train control was ordered to be installed on a second division and 45 additional railroads upon which train control had not before been ordered.

On July 18, 1924, the Commission issued its order which confirmed the installation of an additional division on the original roads, but postponed the time of installation on the 45 new roads, as well as exempting 6, and indefinitely suspending the date of completion of 5 of the 47 roads upon which an additional division was ordered.

The original requirements specified that the automatic train stop system be without manual control by the engineman; that is, compelling an automatic application of the train brakes at the entrance to a "restricted" zone until the train was brought to a stop, after which the apparatus could be restored to normal conditions manually, and the train permitted to proceed. Later, as the result of protests from the railroads, this requirement was modified to permit the engineman, if alert, to forestall the automatic brake application by operating a forestalling or acknowledging device. Although thereby eliminating unnecessary train stops, some protection was sacrificed in that obedience to signal indications was not enforced by the automatic train stop system.

Since the early orders of the Commission the specifications covering automatic train stop, train control and cab signal systems have undergone minor revisions. For the latest standards, refer to Rules, Standards and Instructions - Bureau of Safety - Interstate Commerce Commission - effective October 1, 1950.

Intermittent Systems

Another system of the contact type was in service on the C.R.I. and P.R.R. until early 1942 when it was replaced with our 4 Indication Coded Cab Signal System. This system made use of a ramp, a short section of rail parallel to and outside of the right side running rail.

A ramp shoe attached to the locomotive rode on the upper surface of the ramp moving the shoe upward to condition certain engine carried apparatus in preparation for a train control application and established an electrical circuit between ramp, locomotive and rail. With the wayside signal at proceed a low voltage current selected by the wayside relays was applied to the ramp to energize other circuits on the locomotive during the interval that

US&S DIV. WABCO - SWISSVALE, PA. ALL RIGHTS RESERVED

the shoe actuated mechanism on the locomotive was "reversed" and a train control application thereby prevented. With the wayside signal at restricting, the electrical energy was removed from the ramp and an application of the train brakes followed. Since a speed governor was included with this system, if the speed of the train was below that determined by the contact setting of the governor a train control application was avoided under this condition and the train could proceed at a speed not exceeding the governor setting until the next "clear" ramp was passed, at which the locomotive equipment was restored to permit train operation at authorized speed.

Both of the systems referred to in the foregoing come under the general classification of the "Intermittent" type of train control as distinguished from the "Continuous" types. With the "Intermittent" types the indication from the track to the train is transferred at certain definite points only, usually located at the wayside signals. Normally, this indication as communicated to the locomotive is not changed between any two indication points.

The two main systems of the "Intermittent" type non-contact in character, are the "Inductive" and the "Permanent Magnet" train stop systems.

The wayside element of the "Inductive" system, termed an "Inductor", consists of one or more coils, assembled around a "U" shaped magnetic structure, securely clamped in a bronze housing structure, mounted parallel to and outside of the right hand running rail. A terminal box attached to the side of the housing provides a means for connecting the coils into the signal system, the selection being completed over contacts in the signal mechanism. No battery or other electrical energy is required for this track element. With the wayside signal at "proceed" this circuit is closed, but open when a "restricting" signal is displayed.

A receiver, comprising an inverted "U" shaped magnetic member around which a primary and secondary winding are placed, is mounted on a specially designed journal box on the locomotive and so positioned that an air gap of approximately 2-1/2 inches is present between it and the inductor as it passes over the latter, and is normally energized from the 32-volt d.c. locomotive supply source.

The secondary winding is so connected that when the receiver passes over an inductor indicating "stop" (circuit between inductor coils and signal mechanism open) a counter E.M.F. is generated, sufficient to cause the stick relay on the locomotive to open its contacts and thus initiate a brake application. If "acknowledgement" is in effect during the passage of the receiver over the inductor as a result of the engineman operating the acknowledging lever, a brake application is forestalled.

US&S DIV. WABCO - SWISSVALE, PA. ALL RIGHTS RESERVED

A more comprehensive description of the "Union Intermittent Inductive Automatic Stop System can be obtained by referring to Bulletin #121. The railroads on which this system is in operation are the C. & O., P. & L.E., Nickel Plate, and on sections of the Western Region of the Santa Fe. Also on P.R.R. locomotives running over certain N.Y.C. territory.

The Intermittent Magnetic Induction Type makes use of a permanent magnet, installed between the running rails, for the wayside element. It is made up of several groups of magnetic bars, with an electro-magnet clearing or diverting coil placed between the magnet groups. With current, selected by the signal mechanism, applied to the electro-magnet the effect of the permanent magnets on the locomotive equipment is cancelled. With this current removed a brake application is initiated when the locomotive receiver, mounted underneath the locomotive passes over the magnet, unless the engineman operates a forestalling device.

Initially, the I.C.C. specification for train stop systems, either of the Intermittent or the Continuous types, required that the resetting device for restoring the locomotive equipment to normal, following a train stop brake application, be located on the locomotive so that it could be operated only from the ground, thereby insuring that the train was brought to complete stop. This provision was later modified to permit its location in the locomotive cab just so long as it was necessary for the engineman to leave his accustomed position in the cab to operate it.

Earlier it was mentioned that a brake application was obtained whenever the brake pipe pressure was reduced below its fully charged value. A rapid reduction would result in an "emergency" application, which on certain types of trains could result in an extremely rough stop with possible damage to the coupling equipment on the cars and to the cars themselves. It, therefore, has been the practice to design the brake applying apparatus to obtain a train control application insofar as possible, at a rate approaching that of an application manually made by the engineman. This type of application is referred to as a "Service" application.

Continuous Systems - U.S. & S. Division

Although the "Intermittent" systems met the I.C.C. specifications and traffic requirements on at least some of the railroads, (and for competitive reasons our company developed the type described in Bulletin 121) the short comings of any of the "Intermittent" types were recognized at Swissvale, and the development of the "Continuous" system was embarked upon, the advantages of which are as follows:

US&S DIV. WABCO - SWISSVALE, PA. ALL RIGHTS RESERVED

(1) The train is always under the influence of the train control or cab signal, since the indication may be received at any point and not confined to certain definite locations as with the "Intermittent" types. Therefore, any change in traffic conditions, whether more or less favorable, irrespective of the location of the train in a block, is immediately reflected in the cab, and with the signal aspect in full view of the engineman at all times.

(2) Clearance requirements on the wayside are completely eliminated, and damage to the locomotive carried receiver by striking obstructions along the track is greatly reduced, since it can be mounted behind the pilot and an ample distance above the rails.

(3) It offers a choice of combinations ranging from:

(a) Cab Signal System only - two to four indications.

(b) Cab Signal with Automatic Train Stop.

(c) Cab Signal with Speed Control - one to four speed limits.

(d) Its flexibility permits normal train operation with possible increase of track capacity, and, particularly with speed control, provides the maximum degree of safety.

On July 11, 1923, the first speed control installation was placed in service, between Lewiston Junction and Sunbury, Pa., on the Pennsylvania Railroad. This was a non-code, three indication, three speed "Track and Loop" system and installations with some variations, were later made on the Santa Fe, Milwaukee, R.F. & P., N. & W. and C.R.R. of N.J.

The earlier installations in compliance with I.C.C. order were of the non-code type, either Single Element, which provided two cab signal indications, or the "Track and Loop" system, with which three cab signal indications were obtained, all with either Train Stop or Speed Control, a total of 13 U.S. & S. equipped installations, with 1402 locomotives and 2654 miles of track, three of which have since been replaced by the "coded" system (Union Pacific, R.F. & P.R.R. and C.R.R. of N.J.)

The locomotive control relay used with the "Track and Loop" system is a two-element, vane type, designated as a TV-20 relay. The "Track" receiver, mounted ahead of the leading axle and between 6 and 9 inches above the rails, picks up the track, or axle, current to energize the "Track" element of the TV-20 relay, while the "Loop" receiver, mounted at the rear of the locomotive, receives the "Loop" current, fed in the same direction in both rails and carried back to the feed end over a wire on the pole line.

US&S DIV. WABCO - SWISSVALE, PA. ALL RIGHTS RESERVED

Since both the "Track" and "Loop" elements are fed from the same source of single phase a.c., and as the TV-20 Relay is essentially a two-phase instrument, there must be a phase displacement of approximately 90 degrees between the "Track" and "Loop" element energy. This is obtained by inserting a reactor in the "Track" feed and a resistance in the "Loop" circuit. To "pick-up" the TV-20 Relay current must be present in both elements, the direction of rotation of the vane, and consequently the cab signal indication (selected over its contacts) depending upon the instantaneous relative polarities of the "Track" and "Loop" currents.

The amplifier provides two stages of amplification for each phase, using four pliotron tubes, with a 350-volt source for the plates of these tubes.

Another type of non-code (single element) which provides two cab signal indications and two speed limits makes use of only the "Track" receiver, the "Loop" circuit being omitted. The locomotive control relay is also of the TV-20 type with this system. The phase splitting is accomplished in the amplifier, using the same pliotron tube combination as with the Two-Element system.

This system was installed on the L. & N., I.C., New Haven, and U.P.

A third non-code type (single element) providing two indications and two speed limits, uses a "Track" receiver, two stage amplifier (one pliotron per stage) and a "D.C." type locomotive control relay (Model 13 or DN-10) installed on the D.L. & W. and B. & M.

During the transition from non-code to code on the U.P., 3-cycle (180-code rate modulators) electronic oscillators were installed on the code equipped locomotives to permit operation over non-code territory. On these the voltage induced in the receiver by the "steady" current in the rails was "coded" by the modulator on the locomotive to provide a "clear" cab signal indication. After the change from non-code to code was completed the modulators were no longer required and were, therefore, removed from the locomotives.

The B. & M. purchased 26 sets of two indication code equipment, with 180-code modulators. With this arrangement, they took advantage of our most modern locomotive equipment (type EL with transistor amplifier) without the need for changing the wayside. In this case the modulator will remain a part of the locomotive equipment until such time as the B. & M. may elect to change over to coded track energy.

In the meantime the need for a four-indication cab signal system was recognized. Since not more than three indications could be obtained with the existing (non-code) systems, it became

US&S DIV. WABCO - SWISSVALE, PA. ALL RIGHTS RESERVED

apparent that a radical departure in design, both with the wayside and locomotive equipment, was inevitable.

During the latter part of 1926, our company was prepared to furnish a four-indication cab signal system (the Code type), and six installations followed with 1801 locomotives and 2798 miles of track. This system was installed on the Pennsylvania, New Haven, C.R.R. of N.J., Long Island, Reading and Pennsylvania-Reading Seashore Lines.

Since, Coded Cab Signal equipment has been installed on the C.R.I. & P., C.B. & Q., U.P., and R.F. & P., 12 Milwaukee diesel locomotives operating in joint U.P. -Milwaukee service, 26 B.& M. diesels and Hudson & Manhattan R.R. cars for a total of approximately 3700 power units and 7400 miles of track.

Our four-indication four-speed code system was installed on 125 Interurban Electric Railway Company cars operating over the San Francisco-Oakland Bay Bridge. Service by this company has now been discontinued. The S.A.L. was furnished 46 sets of locomotive equipment and the wayside is equipped for coded cab signal operation over certain portions of the railroad but cab signal service has not been started.

The Stockholm Tramways (Sweden) has been furnished 65 sets of three-indication two-speed control. This system has been in service since 1950.

With the Code System an alternating current is fed toward the train, under the receiver (mounted ahead of the leading wheels) through wheels and axles returning over the adjacent rail to its source.

This current is interrupted over code transmitter contacts:

180 times per minute for "clear" cab signal
120 times per minute for "approach medium"
75 times per minute for "approach"

and either "steady" current, or no current for "restricting" the code rate selection being made over contacts of certain wayside relays. The voltage induced in the receivers is conditioned in the amplifier to operate the master relay. This relay, a polar biased instrument, follows the code in the rails, and the 32-volt d.c. current furnished by the locomotive equipment is "pole-changed", at the code rate, to energize the resonant circuits for operation of the "Decoding" or "Indication" relays, each resonant circuit "accepting" the energy for the code rate at which it is tuned and "rejecting" the other codes. Another set of relays (acknowledging) complete the circuit to magnet valve, following operation of the "acknowledging" switch on a change to a less

US&S DIV. WABCO - SWISSVALE, PA. ALL RIGHTS RESERVED

favorable cab signal indication, directly from the 32-volt d.c. locomotive supply, to silence a warning whistle (with cab signals only) or to forestall an automatic brake application with either train stop or speed control.

Instruction pamphlets in the U-5620 series cover the "Cab Signal" systems and "Speed Control" systems on the various railroads using the Type E cab signal equipment.

Although the basic operation of the various types of coded cab signal equipment listed below is fundamentally unchanged, the equipment box contents have been changed to take advantage of improved amplifier, decoding unit and relay design, as well as in the grouping of these units.

The first type of locomotive equipment is referred to as the "plug and cable" type. This was followed by the Type "AR", (the first approach to completely "plug-in" equipment as recognized today), Type D, Type E and Type EL in this order, the last named being that on display in the Exhibit Room (the exhibit representing the most modern equipment, both electrically and pneumatically) with transistors substituted for vacuum tubes in the amplifier. Except for some of the equipment box carried units, this exhibit is a reproduction of the cab signal and speed control installation in service on the Pennsylvania Railroad, which incidentally, is the most extensive, both from the standpoint of locomotives and track miles equipped.

The P.R.R. (and the other code equipped roads) code installation in compliance with the I.C.C. orders, was begun early in 1927. Before this, one division (Harrisburg to Baltimore) had been equipped with the "Track and Loop" system, using 100 cycles a.c. for the "Track" and "Loop" currents. This later was replaced with the code system.

The electrical equipment was of the "plug and cable" type, with "whistle and acknowledger" and "Train Stop" brake applying equipment, the Timing Valve Assembly being the connecting link between the electric and pneumatic portions of the locomotive apparatus.

With the Timing Valve Magnet energized its valve structure, is positioned to close the connection to the warning whistle and atmosphere and to admit compressed air, usually at a pressure of 45 p.s.i., to the Timing Reservoir and to the underside of the timing valve piston. This caused the piston to move up to close its valve and prevent the brake application valve pressure from exhausting to atmosphere, thereby permitting the engineman to release the train brakes.

Each cab signal change to a more restrictive indication resulted in the de-energization of the Timing Valve Magnet; its

US&S DIV. WABCO - SWISSVALE, PA. ALL RIGHTS RESERVED

valve structure thereby shifted position, cutting off the supply to the Timing Reservoir and the underside of the Timing Valve piston, and venting the air stored in both through the whistle to atmosphere. With the pressure reduced to about 13 p.s.i., a spring in the Timing Valve forced the piston to its downward position to open the connection between the application valve and atmosphere, timed by a choke in the exhaust passage to 6 seconds, and an automatic application of the brakes followed.

If, on the other hand, the engineman operated the acknowledging switch before the expiration of the 6 second delay, acknowledging relays were picked up to complete the circuit to the Timing Valve Magnet and re-energize the magnet, thereby recharging the Timing Reservoir and Timing Valve to forestall a brake application. The Brake Valve was of the HS-2 type, with the application portion and certain other parts related to the train stop system, carried in the brake valve body portion.

This system did not enforce obedience to the speed permitted by the cab signal indication displayed. It merely called the engineman's attention to the need of taking required action and depended upon his alertness for the action necessary.

About 1931 the P.R.R., and certain other roads, petitioned the I.C.C. to permit removal of the train stop feature, but to retain the cab signal, with the warning whistle sounding continuously until "acknowledged" by the engineman with each more restrictive change of cab signal indication believing this to afford comparable protection since the fireman would also be alerted, and the Commission consented. The P.R.R. had voluntarily added several additional divisions to their existing cab signal territory and the locomotives equipped for this service were without the brake applying feature. This type of operation continued until early 1951 when the Pennsylvania elected to add speed control to their cab signal equipped locomotives as well as to road diesels later purchased.

The latest type of brake valve (DS-24) is installed on all speed control equipped diesel and electric locomotives, in which the application valve and associated parts connected with automatic brake application are housed. A Timing Valve Assembly, similar to that previously described, together with a governor to provide three speed limits (20 m.p.h. for "Restricting", 30 m.p.h. for "Approach" and 45 m.p.h. for "Approach Medium" (the train speed is not limited under a "clear" cab signal, although space has been provided to add contacts should a maximum speed limit be later desired) and a Suppression Valve which permits the engineman to "suppress" a speed control application if running above the speed called for by the cab signal indication displayed. The suppression action consists of the engineman applying the train brakes with the brake valve until a complete "service" application has been made, or until the speed of the train has been reduced to that permitted by the cab signal indication.

US&S DIV. WABCO - SWISSVALE, PA. ALL RIGHTS RESERVED

At this time the Long Island Railroad and C.R.R. of N.J., after some years of 3 and 4-indication coded cab signal operation, added two speed control to their power units.

With any of the Train Stop Systems, when leaving equipped territory the only action required by the engineman is to operate the forestalling (or acknowledging) device, and the train can continue at authorized speed, even though, as with the continuous systems, the cab signal displays the most restrictive indication.

However, with speed control the speed is limited to that permitted by the cab signal indication displayed, which in this case is 20 m.p.h. It, therefore, is necessary to energize the Timing Valve Magnet direct, by-passing the governor contacts over unequipped territory. Either of the two following arrangements are generally used.

(1) At the point of departure from equipped territory, a wire loop is installed between the rails and energized to produce a "clear" cab signal, the current being considerably in excess of "normal" track current. When passing over the loop the engineman reverses a "cut-out" switch to energize an electro-pneumatic relay and the Timing Valve Magnet is then energized directly over front contacts of this relay. To guard against unauthorized operation of the "cutout" switch in equipped territory, a resistor is inserted in the circuit to "de-sensitize the receiver, during the switch reversal and a restrictive indication would immediately follow which would require a reduction in speed and fail to permit energizing the E.P. Relay. Hence the high current in the "cutout" loop to override the effect of the resistor in the receiver circuit during "cutout" switch reversal in order to hold the "clear" indication while over the loop.

(2) A second method is to add a 270-code decoding unit and a slow releasing relay energized by this unit to the locomotive equipment, and 270 code applied to the leaving track circuit or loop. With this arrangement the "cutout" is automatically accomplished.

With either scheme a "cut-in" loop is installed at the entrance to equipped territory to guarantee that the locomotive equipment "automatically" cuts in before entering this territory.

Because of expense and circuit complications the P.R.R. is using a "compromise" cutout feature. Through check circuits reversal of the "speed control" switch will cause an automatic brake application under any of the proceed indications, permitting "cut-out" only under a restricting indication. However, this makes it possible for an engineman to establish a "speed control cutout" in an occupied block, which, of course, is contrary to operating rules.

US&S DIV. WABCO - SWISSVALE, PA. ALL RIGHTS RESERVED

"CY" Cab Signal System

By 1953, the need for a cab signal system for classification yard service was recognized. Since in most cases it is impracticable to use the running rails for carrying the signal transmitted by the control point to the "humping" locomotive, the cab signal control is transmitted from the wayside to the locomotive through inductive coupling by a modulated carrier current flowing in an elevated wire on a pole line running parallel to the receiving yard tracks and a receiving coil mounted on top of the locomotive to accept the signal from the control point in a manner similar to the operation of our Inductive Train Communication System.

The cab signal indications are:

Hump Fast
Hump Slow
Back Up
Stop

On one road a fifth indication has been provided to indicate "Hump Medium".

Remote Control Of Train

A glimpse into the future was had when on December 1, 1955, a demonstration was made between New Rochelle and Rye, N.Y., on the New Haven Railroad, a distance of 7.5 miles, during which a multiple-unit car was remotely controlled.

The remote control panel was located at Larchmont Station (two miles east of New Rochelle and 5.5 miles west of Rye). The car was run, coasted or stopped, east or west, at the will of the control station operator. This was accomplished by installing a set of "CY" cab signal equipment, as used in classification yard service, and a set of EL cab signal equipment to protect the movements of the car in the event that traffic conditions in advance required stopping of which the control operator may have had no knowledge.

Since the car was out of sight of the control operator most of the time and as it had been planned to make a series of station stops, a set of I.T.C. two-way communication equipment was included to pass the needed information on to him.

In an installation of the future, this intelligence could be conveyed to the control operator over circuits or space and indicated on a model board.

Automatic Train Operation

In 1960, a joint effort between GRS and Union Switch and Signal

US&S DIV. WABCO - SWISSVALE, PA. ALL RIGHTS RESERVED

under the guidance of NYCTA was made to fully automate a shuttle train between Grand Central to Time Square. U.S. & S. designed the wayside circuitry and shared the controls of the train with GRS, who also designed the Automatic Dispatching Unit. The code rates of 270, 180, and 120 cpm were used for speed commands while the 75 cpm code rate was assigned to automatic door opening and reversal of the train control. This venture was a complete success, yet, unfortunately was destroyed by fire while berthed in the station.

In 1964, tests were performed in Chicago and later in San Francisco using AFO track circuits and coded cab signals using the latest solid state circuitry. This same equipment has been installed in Montreal for Expo 67 World's Fair. For further reference to this installation, see "The Expo Express: Automated Mass Transportation for the 1967 World Exhibition" writeup in the Engineering Journal, dated November, 1966, copy of which follows this chapter.

A six indication, five speed type EL cab signal system has been developed for Delaware River Port Authority, near Philadelphia, using 60 cycle and 100 cycle track circuits. The six control codes are no code, 75, 120, 180, 270, and 420 cpm. This cab signal system is being furnished in conjunction with an automatic train operation arrangement furnished by another supplier.

Summary

To summarize, a continuous cab signal and speed control system must provide:

(a) Signal indications in the cab to reflect traffic conditions immediately in advance of the train at any instant, and .....

(b) Enforce obedience to the speed permitted by the cab signal indication displayed.

(c) Failure on the part of the engineman to operate the train in accordance with prescribed instructions will result in an automatic application of the train brakes .....

(d) But leaves control of the train in his hands if appropriate action is taken.

The selection of the number of cab signal aspects and speed limits is determined by the operating needs of a given railroad and covers a range of from two-indication single-speed to six-indication five-speed.

US&S DIV. WABCO - SWISSVALE, PA. ALL RIGHTS RESERVED

The code system can provide two, three or six indications, with from one to five speed limits. If when the installation is made, traffic conditions justify the use of only two or three indications, but that at some later period a fourth indication might be desired, an equipment box large enough to house the apparatus of a four-indication system would be selected, but decoding units and associated relays for only the number of indications wanted at the time would be purchased, and the remaining units readily added later. A cab signal with space provisions for four-indications would, of course, be initially installed. Contacts for only the number of speed limits required at the time the installation is cut in service would be applied in the governor, although space would be provided to add additional contacts should more speed limits be later desired.

Moreover, the devices previously discussed, perhaps in combination, or in revised form, may have application in industrial fields, by remotely controlling a vehicle from a safe vantage point rather than risk personal injury of or the effects of contamination to workmen who otherwise would be required to accompany the vehicle in the dangerous area.

US&S DIV. WABCO - SWISSVALE, PA. ALL RIGHTS RESERVED

PRINCIPLES OF RAILROAD OPERATION AND RAILWAY SIGNALING

CHAPTER XII - AUTOMATIC TRAIN CONTROL

Introduction:

Automatic train control, in its broadest sense, implies the use of apparatus to automatically stop a train, or to control its speed, without intervention by the engineman, and is effective only when those entrusted with the operation of the train do not take proper action.

The development of the automatic air brake system made stopping a train by some roadway device relatively simple. With this system a pipe, called the brake pipe, is carried continously from locomotive to each car, flexibly coupled between cars, and is charged from the locomotive brake valve with compressed air at pressures varying between 70 and 110 pounds per square inch depending upon the type of train service. When the brake pipe is fully charged certain valves on the locomotive and each car are conditioned to effect release of the brakes on the locomotive and cars. Conversely, a reduction of the air pressure in the brake pipe causes the valves to be positioned to admit air into the brake cylinders to apply the brakes.

One of the earliest train stop systems was the plain mechanical type with which a cock or valve connected to a branch in the brake pipe came in contact with the roadside device, located in the immediate vicinity of the wayside signal, when the signal indication was less favorable than proceed, thereby opening the cock or valve to vent brake pipe air and apply the train brakes. When the signal displayed "proceed" the roadside element was automatically retracted by mechanism associated with the wayside signal. Some of the first practical tests were made with a device of this general type in the early 1890's and development of other types followed.

The first permanent installation was of the plain mechanical trip type on the Boston Elevated in 1900 made by the U.S. & S. Co. This type was later used on the Philadelphia Rapid Transit, Hudson & Manhattan, the Interborough of N.Y. and the elevated railroads of Chicago.

The work of investigating the merits of the systems available at the time had been done voluntarily by the transportation interests involved, and by agreement between these interests and the owners of the various devices. In 1906 Congress instructed the I.C.C. to investigate the subject of automatic train control, and as a result The Block Signal and Train Control Board, composed of prominent engineers having a knowledge of the subject, was appointed to make these investigations acting under the authority of the Interstate Commerce Commission.

 ALL RIGHTS RESERVED

The Transportation Act of 1920 gave the Commission authority to order the installation of train control after proper investigation. In January, 1922, an order was issued by the Commission requiring 49 railroads to show cause why they should not install train control on a complete passenger division.

On January 14, 1924, the Commission issued another order citing 47 of the original 49 roads upon which train control was ordered to be installed on a second division and 45 additional railroads upon which train control had not before been ordered.

On July 18, 1924, the Commission issued its order which confirmed the installation of an additional division on the original roads, but postponed the time of installation on the 45 new roads, as well as exempting 6, and indefinitely suspending the date of completion of 5 of the 47 roads upon which an additional division was ordered.

The original requirements specified that the automatic train stop system be without manual control by the engineman; that is, compelling an automatic application of the train brakes at the entrance to a "restricted" zone until the train was brought to a stop, after which the apparatus could be restored to normal conditions manually, and the train permitted to proceed. Later, as the result of protests from the railroads, this requirement was modified to permit the engineman, if alert, to forestall the automatic brake application by operating a forestalling or acknowledging device. Although thereby eliminating unnecessary train stops, some protection was sacrificed in that obedience to signal indications was not enforced by the automatic train stop system.

Since the early orders of the Commission the specifications covering automatic train stop, train control and cab signal systems have undergone minor revisions. For the latest standards, refer to Rules, Standards and Instructions - Bureau of Safety - Interstate Commerce Commission - effective October 1, 1950.

Intermittent Systems

Another system of the contact type was in service on the C.R.I. and P.R.R. until early 1942 when it was replaced with our 4 Indication Coded Cab Signal System. This system made use of a ramp, a short section of rail parallel to and outside of the right side running rail.

A ramp shoe attached to the locomotive rode on the upper surface of the ramp moving the shoe upward to condition certain engine carried apparatus in preparation for a train control application and established an electrical circuit between ramp, locomotive and rail. With the wayside signal at proceed a low voltage current selected by the wayside relays was applied to the ramp to energize other circuits on the locomotive during the interval that

US&S DIV. WABCO - SWISSVALE, PA. ALL RIGHTS RESERVED

the shoe actuated mechanism on the locomotive was "reversed" and a train control application thereby prevented. With the wayside signal at restricting, the electrical energy was removed from the ramp and an application of the train brakes followed. Since a speed governor was included with this system, if the speed of the train was below that determined by the contact setting of the governor a train control application was avoided under this condition and the train could proceed at a speed not exceeding the governor setting until the next "clear" ramp was passed, at which the locomotive equipment was restored to permit train operation at authorized speed.

Both of the systems referred to in the foregoing come under the general classification of the "Intermittent" type of train control as distinguished from the "Continuous" types. With the "Intermittent" types the indication from the track to the train is transferred at certain definite points only, usually located at the wayside signals. Normally, this indication as communicated to the locomotive is not changed between any two indication points.

The two main systems of the "Intermittent" type non-contact in character, are the "Inductive" and the "Permanent Magnet" train stop systems.

The wayside element of the "Inductive" system, termed an "Inductor", consists of one or more coils, assembled around a "U" shaped magnetic structure, securely clamped in a bronze housing structure, mounted parallel to and outside of the right hand running rail. A terminal box attached to the side of the housing provides a means for connecting the coils into the signal system, the selection being completed over contacts in the signal mechanism. No battery or other electrical energy is required for this track element. With the wayside signal at "proceed" this circuit is closed, but open when a "restricting" signal is displayed.

A receiver, comprising an inverted "U" shaped magnetic member around which a primary and secondary winding are placed, is mounted on a specially designed journal box on the locomotive and so positioned that an air gap of approximately 2-1/2 inches is present between it and the inductor as it passes over the latter, and is normally energized from the 32-volt d.c. locomotive supply source.

The secondary winding is so connected that when the receiver passes over an inductor indicating "stop" (circuit between inductor coils and signal mechanism open) a counter E.M.F. is generated, sufficient to cause the stick relay on the locomotive to open its contacts and thus initiate a brake application. If "acknowledgement" is in effect during the passage of the receiver over the inductor as a result of the engineman operating the acknowledging lever, a brake application is forestalled.

US&S DIV. WABCO - SWISSVALE, PA. ALL RIGHTS RESERVED

A more comprehensive description of the "Union Intermittent Inductive Automatic Stop System can be obtained by referring to Bulletin #121. The railroads on which this system is in operation are the C. & O., P. & L.E., Nickel Plate, and on sections of the Western Region of the Santa Fe. Also on P.R.R. locomotives running over certain N.Y.C. territory.

The Intermittent Magnetic Induction Type makes use of a permanent magnet, installed between the running rails, for the wayside element. It is made up of several groups of magnetic bars, with an electro-magnet clearing or diverting coil placed between the magnet groups. With current, selected by the signal mechanism, applied to the electro-magnet the effect of the permanent magnets on the locomotive equipment is cancelled. With this current removed a brake application is initiated when the locomotive receiver, mounted underneath the locomotive passes over the magnet, unless the engineman operates a forestalling device.

Initially, the I.C.C. specification for train stop systems, either of the Intermittent or the Continuous types, required that the resetting device for restoring the locomotive equipment to normal, following a train stop brake application, be located on the locomotive so that it could be operated only from the ground, thereby insuring that the train was brought to complete stop. This provision was later modified to permit its location in the locomotive cab just so long as it was necessary for the engineman to leave his accustomed position in the cab to operate it.

Earlier it was mentioned that a brake application was obtained whenever the brake pipe pressure was reduced below its fully charged value. A rapid reduction would result in an "emergency" application, which on certain types of trains could result in an extremely rough stop with possible damage to the coupling equipment on the cars and to the cars themselves. It, therefore, has been the practice to design the brake applying apparatus to obtain a train control application insofar as possible, at a rate approaching that of an application manually made by the engineman. This type of application is referred to as a "Service" application.

Continuous Systems - U.S. & S. Division

Although the "Intermittent" systems met the I.C.C. specifications and traffic requirements on at least some of the railroads, (and for competitive reasons our company developed the type described in Bulletin 121) the short comings of any of the "Intermittent" types were recognized at Swissvale, and the development of the "Continuous" system was embarked upon, the advantages of which are as follows:

US&S DIV. WABCO - SWISSVALE, PA. ALL RIGHTS RESERVED

(1) The train is always under the influence of the train control or cab signal, since the indication may be received at any point and not confined to certain definite locations as with the "Intermittent" types. Therefore, any change in traffic conditions, whether more or less favorable, irrespective of the location of the train in a block, is immediately reflected in the cab, and with the signal aspect in full view of the engineman at all times.

(2) Clearance requirements on the wayside are completely eliminated, and damage to the locomotive carried receiver by striking obstructions along the track is greatly reduced, since it can be mounted behind the pilot and an ample distance above the rails.

(3) It offers a choice of combinations ranging from:

(a) Cab Signal System only - two to four indications.

(b) Cab Signal with Automatic Train Stop.

(c) Cab Signal with Speed Control - one to four speed limits.

(d) Its flexibility permits normal train operation with possible increase of track capacity, and, particularly with speed control, provides the maximum degree of safety.

On July 11, 1923, the first speed control installation was placed in service, between Lewiston Junction and Sunbury, Pa., on the Pennsylvania Railroad. This was a non-code, three indication, three speed "Track and Loop" system and installations with some variations, were later made on the Santa Fe, Milwaukee, R.F. & P., N. & W. and C.R.R. of N.J.

The earlier installations in compliance with I.C.C. order were of the non-code type, either Single Element, which provided two cab signal indications, or the "Track and Loop" system, with which three cab signal indications were obtained, all with either Train Stop or Speed Control, a total of 13 U.S. & S. equipped installations, with 1402 locomotives and 2654 miles of track, three of which have since been replaced by the "coded" system (Union Pacific, R.F. & P.R.R. and C.R.R. of N.J.)

The locomotive control relay used with the "Track and Loop" system is a two-element, vane type, designated as a TV-20 relay. The "Track" receiver, mounted ahead of the leading axle and between 6 and 9 inches above the rails, picks up the track, or axle, current to energize the "Track" element of the TV-20 relay, while the "Loop" receiver, mounted at the rear of the locomotive, receives the "Loop" current, fed in the same direction in both rails and carried back to the feed end over a wire on the pole line.

US&S DIV. WABCO - SWISSVALE, PA. ALL RIGHTS RESERVED

Since both the "Track" and "Loop" elements are fed from the same source of single phase a.c., and as the TV-20 Relay is essentially a two-phase instrument, there must be a phase displacement of approximately 90 degrees between the "Track" and "Loop" element energy. This is obtained by inserting a reactor in the "Track" feed and a resistance in the "Loop" circuit, To "pick-up" the TV-20 Relay current must be present in both elements, the direction of rotation of the vane, and consequently the cab signal indication (selected over its contacts) depending upon the instantaneous relative polarities of the "Track" and "Loop" currents.

The amplifier provides two stages of amplification for each phase, using four pliotron tubes, with a 350-volt source for the plates of these tubes.

Another type of non-code (single element) which provides two cab signal indications and two speed limits makes use of only the "Track" receiver, the "Loop" circuit being omitted. The locomotive control relay is also of the TV-20 type with this system. The phase splitting is accomplished in the amplifier, using the same pliotron tube combination as with the Two-Element system.

This system was installed on the L. & N., I.C., New Haven, and U.P.

A third non-code type (single element) providing two indications and two speed limits, uses a "Track" receiver, two stage amplifier (one pliotron per stage) and a "D.C." type locomotive control relay (Model 13 or DN-10) installed on the D.L. & W. and B. & M.

During the transition from non-code to code on the U.P., 3-cycle (180-code rate modulators) electronic oscillators were installed on the code equipped locomotives to permit operation over non-code territory. On these the voltage induced in the receiver by the "steady" current in the rails was "coded" by the modulator on the locomotive to provide a "clear" cab signal indication. After the change from non-code to code was completed the modulators were no longer required and were, therefore, removed from the locomotives.

The B. & M. purchased 26 sets of two indication code equipment, with 180-code modulators. With this arrangement, they took advantage of our most modern locomotive equipment (type EL with transistor amplifier) without the need for changing the wayside. In this case the modulator will remain a part of the locomotive equipment until such time as the B. & M. may elect to change over to coded track energy.

In the meantime the need for a four-indication cab signal system was recognized. Since not more than three indications could be obtained with the existing (non-code) systems, it became

US&S DIV. WABCO - SWISSVALE, PA. ALL RIGHTS RESERVED

apparent that a radical departure in design, both with the wayside and locomotive equipment, was inevitable.

During the latter part of 1926, our company was prepared to furnish a four-indication cab signal system (the Code type), and six installations followed with 1801 locomotives and 2798 miles of track. This system was installed on the Pennsylvania, New Haven, C.R.R. of N.J., Long Island, Reading and Pennsylvania-Reading Seashore Lines.

Since, Coded Cab Signal equipment has been installed on the C.R.I. & P., C.B. & Q., U.P., and R.F. & P., 12 Milwaukee diesel locomotives operating in joint U.P. -Milwaukee service, 26 B.& M. diesels and Hudson & Manhattan R.R. cars for a total of approximately 3700 power units and 7400 miles of track.

Our four-indication four-speed code system was installed on 125 Interurban Electric Railway Company cars operating over the San Francisco-Oakland Bay Bridge. Service by this company has now been discontinued. The S.A.L. was furnished 46 sets of locomotive equipment and the wayside is equipped for coded cab signal operation over certain portions of the railroad but cab signal service has not been started.

The Stockholm Tramways (Sweden) has been furnished 65 sets of three-indication two-speed control. This system has been in service since 1950.

With the Code System an alternating current is fed toward the train, under the receiver (mounted ahead of the leading wheels) through wheels and axles returning over the adjacent rail to its source.

This current is interrupted over code transmitter contacts:

180 times per minute for "clear" cab signal
120 times per minute for "approach medium"
75 times per minute for "approach"

and either "steady" current, or no current for "restricting" the code rate selection being made over contacts of certain wayside relays. The voltage induced in the receivers is conditioned in the amplifier to operate the master relay. This relay, a polar biased instrument, follows the code in the rails, and the 32-volt d.c. current furnished by the locomotive equipment is "pole-changed", at the code rate, to energize the resonant circuits for operation of the "Decoding" or "Indication" relays, each resonant circuit "accepting" the energy for the code rate at which it is tuned and "rejecting" the other codes. Another set of relays (acknowledging) complete the circuit to magnet valve, following operation of the "acknowledging" switch on a change to a less

US&S DIV. WABCO - SWISSVALE, PA. ALL RIGHTS RESERVED

favorable cab signal indication, directly from the 32-volt d.c. locomotive supply, to silence a warning whistle (with cab signals only) or to forestall an automatic brake application with either train stop or speed control.

Instruction pamphlets in the U-5620 series cover the "Cab Signal" systems and "Speed Control" systems on the various railroads using the Type E cab signal equipment.

Although the basic operation of the various types of coded cab signal equipment listed below is fundamentally unchanged, the equipment box contents have been changed to take advantage of improved amplifier, decoding unit and relay design, as well as in the grouping of these units.

The first type of locomotive equipment is referred to as the "plug and cable" type. This was followed by the Type "AR", (the first approach to completely "plug-in" equipment as recognized today), Type D, Type E and Type EL in this order, the last named being that on display in the Exhibit Room (the exhibit representing the most modern equipment, both electrically and pneumatically) with transistors substituted for vacuum tubes in the amplifier. Except for some of the equipment box carried units, this exhibit is a reproduction of the cab signal and speed control installation in service on the Pennsylvania Railroad, which incidentally, is the most extensive, both from the standpoint of locomotives and track miles equipped.

The P.R.R. (and the other code equipped roads) code installation in compliance with the I.C.C. orders, was begun early in 1927. Before this, one division (Harrisburg to Baltimore) had been equipped with the "Track and Loop" system, using 100 cycles a.c. for the "Track" and "Loop" currents. This later was replaced with the code system.

The electrical equipment was of the "plug and cable" type, with "whistle and acknowledger" and "Train Stop" brake applying equipment, the Timing Valve Assembly being the connecting link between the electric and pneumatic portions of the locomotive apparatus.

With the Timing Valve Magnet energized its valve structure, is positioned to close the connection to the warning whistle and atmosphere and to admit compressed air, usually at a pressure of 45 p.s.i., to the Timing Reservoir and to the underside of the timing valve piston. This caused the piston to move up to close its valve and prevent the brake application valve pressure from exhausting to atmosphere, thereby permitting the engineman to release the train brakes.

Each cab signal change to a more restrictive indication resulted in the de-energization of the Timing Valve Magnet; its

US&S DIV. WABCO - SWISSVALE, PA. ALL RIGHTS RESERVED

At this time the Long Island Railroad and C.R.R. of N.J., after some years of 3 and 4-indication coded cab signal operation, added two speed control to their power units.

With any of the Train Stop Systems, when leaving equipped territory the only action required by the engineman is to operate the forestalling (or acknowledging) device, and the train can continue at authorized speed, even though, as with the continuous systems, the cab signal displays the most restrictive indication.

However, with speed control the speed is limited to that permitted by the cab signal indication displayed, which in this case is 20 m.p.h. It, therefore, is necessary to energize the Timing Valve Magnet direct, by-passing the governor contacts over unequipped territory. Either of the two following arrangements are generally used.

(1) At the point of departure from equipped territory, a wire loop is installed between the rails and energized to produce a "clear" cab signal, the current being considerably in excess of "normal" track current. When passing over the loop the engineman reverses a "cut-out" switch to energize an electro-pneumatic relay and the Timing Valve Magnet is then energized directly over front contacts of this relay. To guard against unauthorized operation of the "cutout" switch in equipped territory, a resistor is inserted in the circuit to "de-sensitize the receiver, during the switch reversal and a restrictive indication would immediately follow which would require a reduction in speed and fail to permit energizing the E.P. Relay. Hence the high current in the "cutout" loop to override the effect of the resistor in the receiver circuit during "cutout" switch reversal in order to hold the "clear" indication while over the loop.

(2) A second method is to add a 270-code decoding unit and a slow releasing relay energized by this unit to the locomotive equipment, and 270 code applied to the leaving track circuit or loop. With this arrangement the "cutout" is automatically accomplished.

With either scheme a "cut-in" loop is installed at the entrance to equipped territory to guarantee that the locomotive equipment "automatically" cuts in before entering this territory.

Because of expense and circuit complications the P.R.R. is using a "compromise" cutout feature. Through check circuits reversal of the "speed control" switch will cause an automatic brake application under any of the proceed indications, permitting "cut-out" only under a restricting indication. However, this makes it possible for an engineman to establish a "speed control cutout" in an occupied block, which, of course, is contrary to operating rules.

US&S DIV. WABCO - SWISSVALE, PA. ALL RIGHTS RESERVED

"CY" Cab Signal System

By 1953, the need for a cab signal system for classification yard service was recognized. Since in most cases it is impracticable to use the running rails for carrying the signal transmitted by the control point to the "humping" locomotive, the cab signal control is transmitted from the wayside to the locomotive through inductive coupling by a modulated carrier current flowing in an elevated wire on a pole line running parallel to the receiving yard tracks and a receiving coil mounted on top of the locomotive to accept the signal from the control point in a manner similar to the operation of our Inductive Train Communication System.

The cab signal indications are:

Hump Fast
Hump Slow
Back Up
Stop

On one road a fifth indication has been provided to indicate "Hump Medium".

Remote Control Of Train

A glimpse into the future was had when on December 1, 1955, a demonstration was made between New Rochelle and Rye, N.Y., on the New Haven Railroad, a distance of 7.5 miles, during which a multiple-unit car was remotely controlled.

The remote control panel was located at Larchmont Station (two miles east of New Rochelle and 5.5 miles west of Rye). The car was run, coasted or stopped, east or west, at the will of the control station operator. This was accomplished by installing a set of "CY" cab signal equipment, as used in classification yard service, and a set of EL cab signal equipment to protect the movements of the car in the event that traffic conditions in advance required stopping of which the control operator may have had no knowledge.

Since the car was out of sight of the control operator most of the time and as it had been planned to make a series of station stops, a set of I.T.C. two-way communication equipment was included to pass the needed information on to him.

In an installation of the future, this intelligence could be conveyed to the control operator over circuits or space and indicated on a model board.

Automatic Train Operation

In 1960, a joint effort between GRS and Union Switch and Signal

US&S DIV. WABCO - SWISSVALE, PA. ALL RIGHTS RESERVED

under the guidance of NYCTA was made to fully automate a shuttle train between Grand Central to Time Square. U.S. & S. designed the wayside circuitry and shared the controls of the train with GRS, who also designed the Automatic Dispatching Unit. The code rates of 270, 180, and 120 cpm were used for speed commands while the 75 cpm code rate was assigned to automatic door opening and reversal of the train control. This venture was a complete success, yet, unfortunately was destroyed by fire while berthed in the station.

In 1964, tests were performed in Chicago and later in San Francisco using AFO track circuits and coded cab signals using the latest solid state circuitry. This same equipment has been installed in Montreal for Expo 67 World's Fair. For further reference to this installation, see "The Expo Express: Automated Mass Transportation for the 1967 World Exhibition" writeup in the Engineering Journal, dated November, 1966, copy of which follows this chapter.

A six indication, five speed type EL cab signal system has been developed for Delaware River Port Authority, near Philadelphia, using 60 cycle and 100 cycle track circuits. The six control codes are no code, 75, 120, 180, 270, and 420 cpm. This cab signal system is being furnished in conjunction with an automatic train operation arrangement furnished by another supplier.

Summary

To summarize, a continuous cab signal and speed control system must provide:

(a) Signal indications in the cab to reflect traffic conditions immediately in advance of the train at any instant, and .....

(b) Enforce obedience to the speed permitted by the cab signal indication displayed.

(c) Failure on the part of the engineman to operate the train in accordance with prescribed instructions will result in an automatic application of the train brakes .....

(d) But leaves control of the train in his hands if appropriate action is taken.

The selection of the number of cab signal aspects and speed limits is determined by the operating needs of a given railroad and covers a range of from two-indication single-speed to six-indication five-speed.

US&S DIV. WABCO - SWISSVALE, PA. ALL RIGHTS RESERVED

The code system can provide two, three or six indications, with from one to five speed limits. If when the installation is made, traffic conditions justify the use of only two or three indications, but that at some later period a fourth indication might be desired, an equipment box large enough to house the apparatus of a four-indication system would be selected, but decoding units and associated relays for only the number of indications wanted at the time would be purchased, and the remaining units readily added later. A cab signal with space provisions for four-indications would, of course, be initially installed. Contacts for only the number of speed limits required at the time the installation is cut in service would be applied in the governor, although space would be provided to add additional contacts should more speed limits be later desired.

Moreover, the devices previously discussed, perhaps in combination, or in revised form, may have application in industrial fields, by remotely controlling a vehicle from a safe vantage point rather than risk personal injury of or the effects of contamination to workmen who otherwise would be required to accompany the vehicle in the dangerous area.

US&S DIV. WABCO - SWISSVALE, PA. ALL RIGHTS RESERVED

PRINCIPLES OF RAILROAD OPERATION AND RAILWAY SIGNALING

CHAPTER XIV - TOTAL TERMINAL CONTROL

Introduction

Total Terminal Control is a term used to designate the integrated controls necessary to operate a complete railroad terminal. This chapter consists of a number of articles, reprints, diagrams and dissertations on various aspects of this very inclusive subject. These will be referred to and explained during the lecture period.

US&S DIV. WABCO - SWISSVALE, PA. ALL RIGHTS RESERVED

TOTAL TERMINAL CONTROL

- MANAGEMENT CONTROL + PROCESS CONTROL
- PROCESS CONTROL = REAL TIME

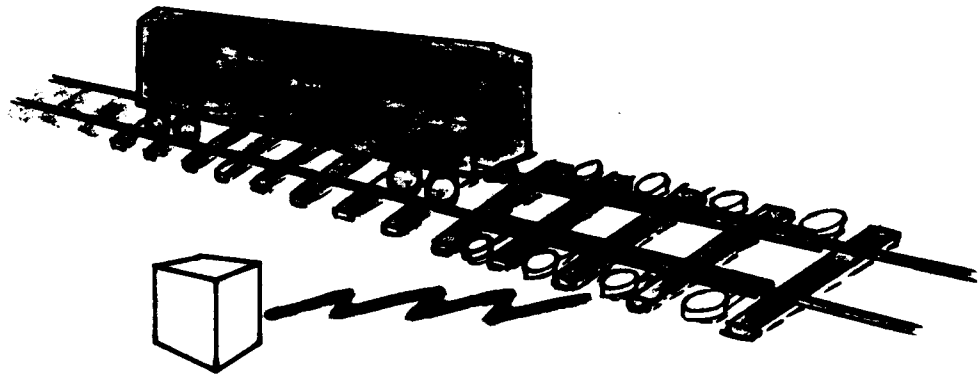

- VR-VRI ANALOG COMPUTER

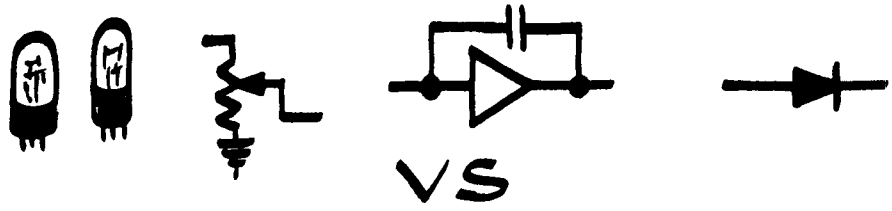

- VR2 DIGITAL

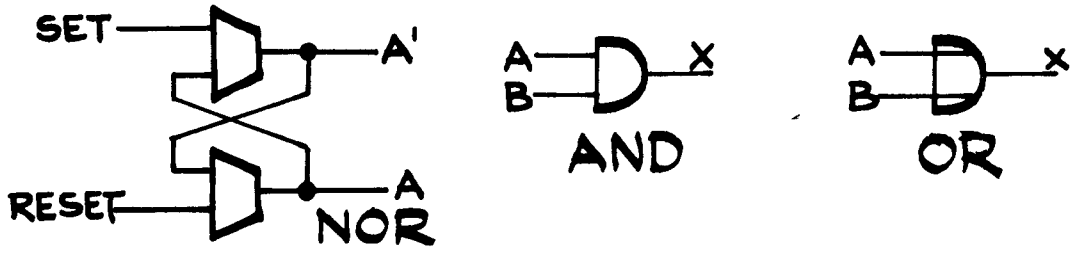

- DIGITAL PROCESS CONTROL FLEXIBILITY

TRACK PARAMETERS - CORRELATIONS

ADDITIONAL GROUPS - FUTURE

ROUTE VERIFICATION

SWITCH LIST CONTROL

HUMP LOCOMOTIVE CONTROL

TRACK FULLNESS REPORTS

INSPECTION REASSIGNMENTS

- TOTAL MANAGEMENT CONTROL FOR TERMINALS

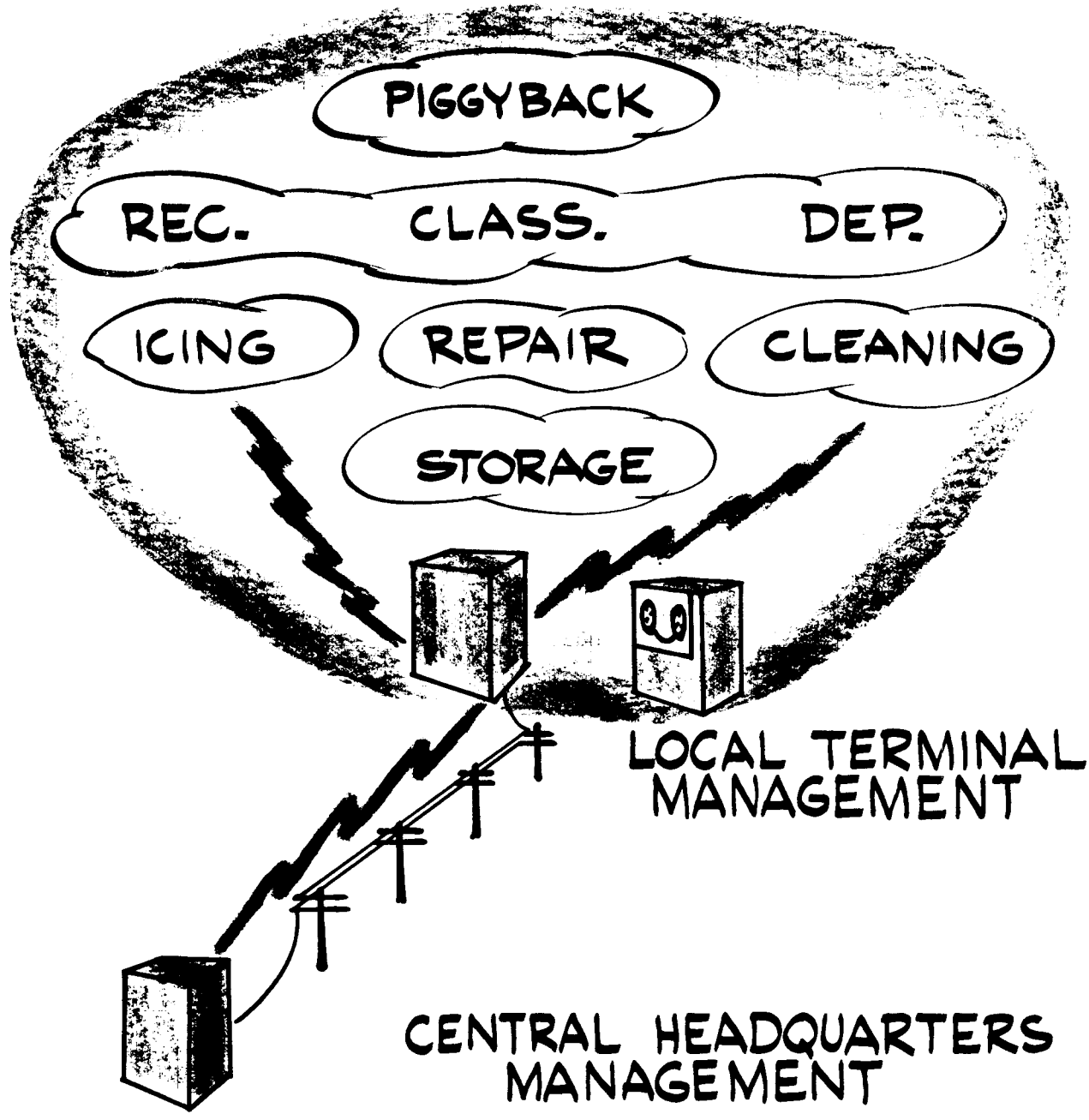

• DIGITAL MANAGEMENT CONTROL SUBSYSTEMS

a. INVENTORY

RECEIVING YARD
CLASSIFICATION YARD
DEPARTURE YARD
} BY CAR#, TRACK# OR TOTAL

REPAIR TRACKS
SHOP
PIGGY BACK
CLEANOUT
SETOFF
STORAGE
ICING
OTHER

b. CLASSIFICATION TRACKS SCHEDULED TO BE PULLED + POWER-TONNAGE MATCH

c. ROVING CLASSIFICATION TRACK ASSIGNMENT

d. CAR DIVERSIONS

e. PER DIEM CALCULATIONS.

f. JOB PERFORMANCE STANDARDS

g. COMPATIBLE INTERFACING

COMMUNICATION & DATA DISPLAY

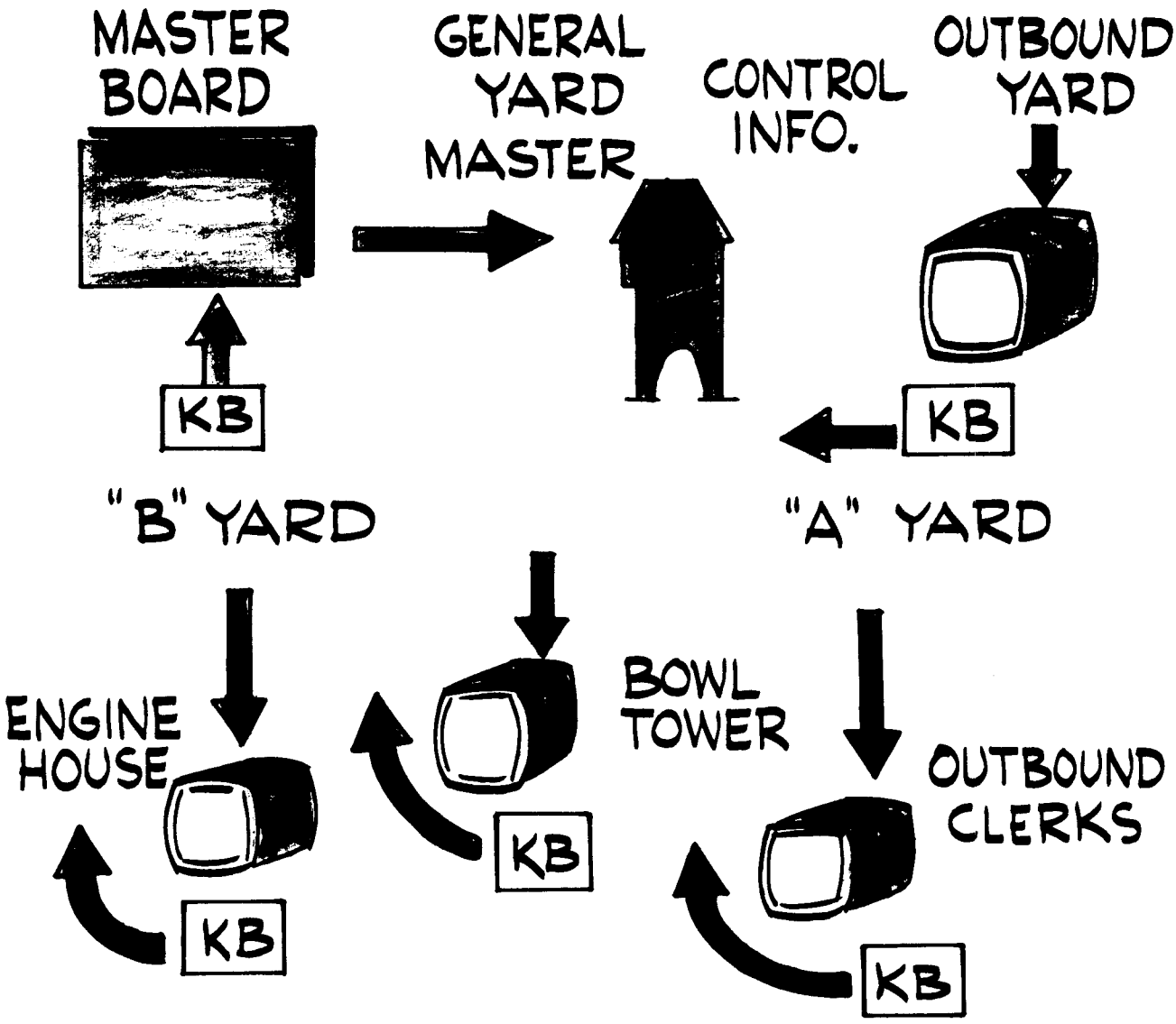

• WHAT ARE TTC PAYOFFS

a. PROCESS CONTROL

b. FEEDBACK FOR CORRECTIVE ACTION

c. RECORD OF CAR ROUTING & LOCATION FOR FAST REPORTING

d. REDUCTION OF L & D

e. FLEXIBILITY THROUGH SOFTWARE

f. BEST USE OF RESOURCES

g. FEWER PEOPLE DOING MORE THINGS

h. ACCURATE TRAIN MAKE UP INFO.

i LESS TRIMMING

j FASTER THROUGH PUT-MORE WORK/UNIT TIME

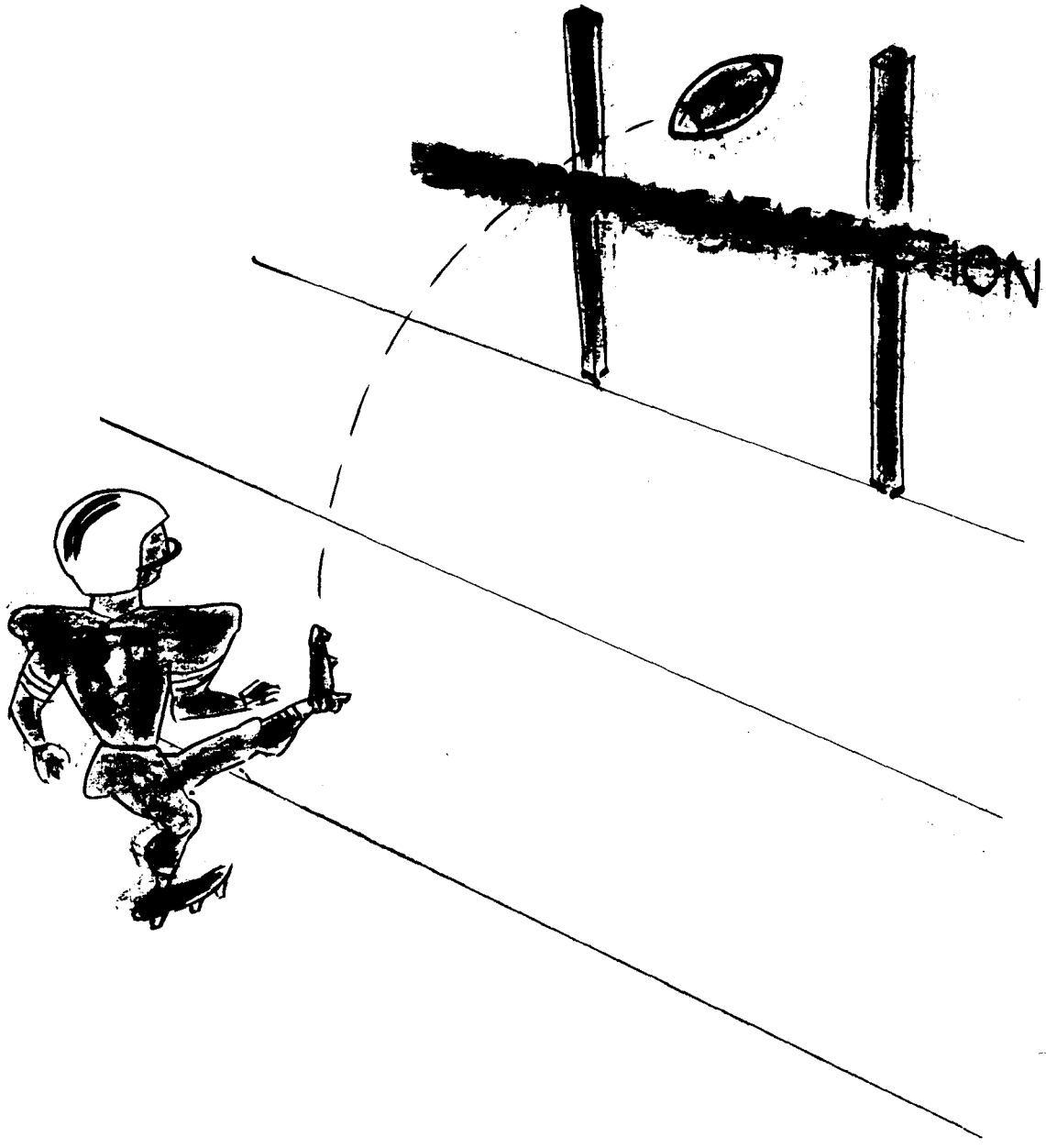
ION

TTC SALES TOOLS

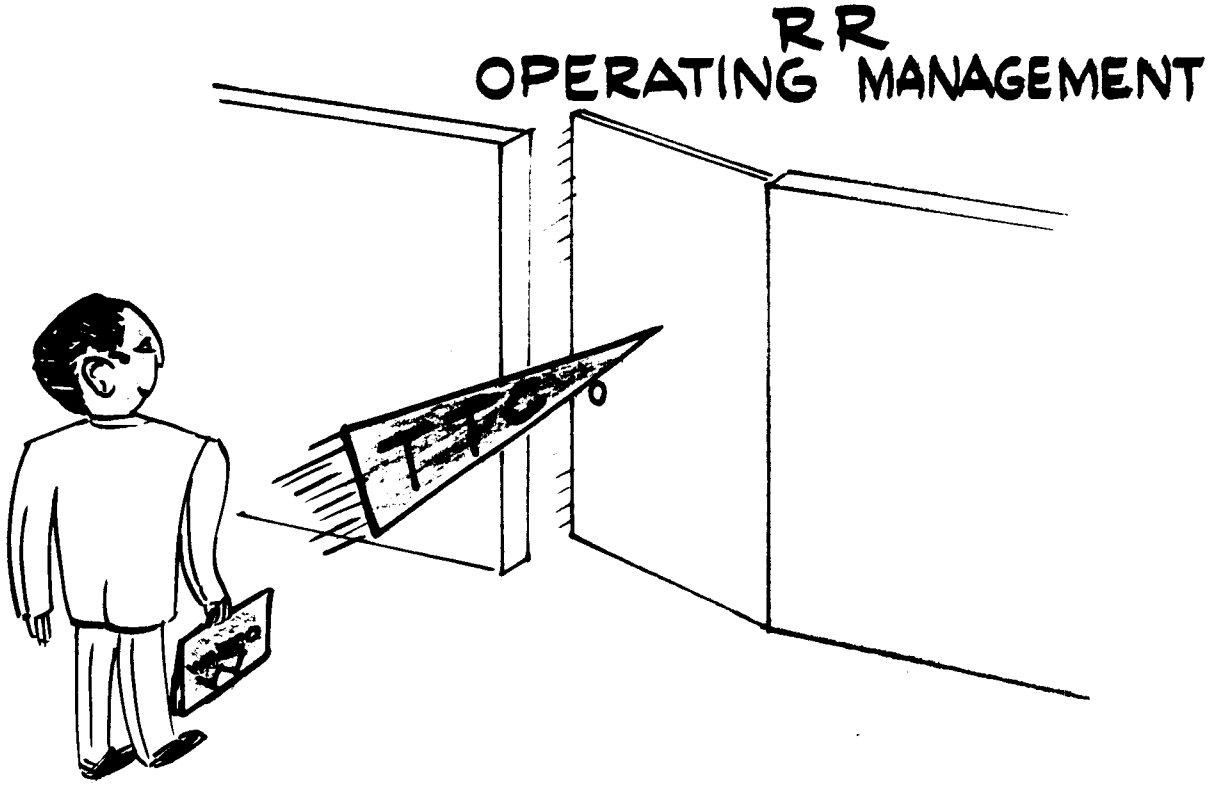

DYNAMICS

1. INTUITIVE TRIGONOMETRY AND CALCULUS

We are all familiar with the characteristics of rectangles and squares. We make use of their properties in laying out patios, measuring rooms, and folding letters. The basic properties of these figures are that their opposite sides are parallel and the corners form right angles (or at the corners the sides are perpendicular). If we would take the rectangle shown below, many things become apparent.

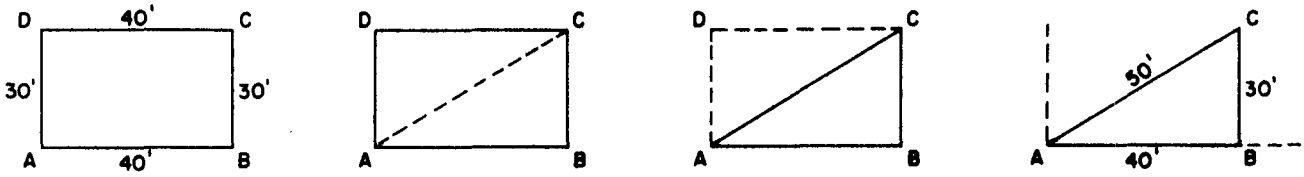

The area of rectangle ABCD equals 1200 square feet, while the area of the triangles ABC and ADC each equal 600 square feet. This leads us to three conclusions: (1) the area of a rectangle equals the product of the two sides (length AD x length AB); (2) the area of a triangle equals half the product of the two sides (1/2 AB x BC) or 1/2 AD x DC); and (3) the units as well as the lengths are multiplied (in this case ft. x ft. equal square feet).

If we wanted to go from A to C we could go from A to B to C, or from A to D to C. It is also possible to go directly from A to C according to the Pythagorean theorem: $AC^2 = AB^2 + BC^2$. By substituting values we see that:

$$AC^2 = (40 \text{ ft.})^2 + (30 \text{ ft.})^2 = 2500 \text{ ft.}^2$$

$$AC = 50 \text{ ft.}$$

1. INTUITIVE TRIGONOMETRY AND CALCULUS (Cont'd.)

It is easy to see that line AC is the most direct connection and its length and direction can be completely described in terms of the sides. The direction would be described as a ratio called a slope or a tangent function. In either case this amounts to the side opposite the origin, or beginning point, divided by the adjacent or connecting side. In this example it would be:

$$\text{Slope AC} = \text{Tangent } \underline{CAB} = \frac{BC}{AB} = \frac{30 \text{ Ft.}}{40 \text{ Ft.}} = 0.75$$

Notice that in this case we divided feet by feet thereby giving a dimensionless ratio.

The other basic trigonometric functions are the sine and cosine, these are the sides related to the hypotenuse or diagonal:

$$\text{Sine } \underline{CAB} = \frac{\text{Side opposite the point or angle}}{\text{Hypotenuse}} = \frac{BC}{AC} = \frac{30 \text{ ft.}}{50 \text{ ft.}} = 0.60$$

$$\text{Sine } \underline{ACD} = \frac{AD}{AC} = \frac{30 \text{ ft.}}{50 \text{ ft.}} = 0.60$$

$$\text{Cosine } \underline{CAB} = \frac{\text{Side adjacent the point or angle}}{\text{Hypotenuse}} = \frac{AB}{AC} = \frac{40 \text{ ft.}}{50 \text{ ft.}} = 0.80$$

$$\text{Cosine } \underline{ACD} = \frac{DC}{AC} = \frac{40 \text{ ft.}}{50 \text{ ft.}} = 0.80$$

More sophisticated problems can be solved by placing triangles and rectangles in a coordinate form. This is more usually recognized as a graph. The same rectangle and triangle previously discussed are shown graphically below. It should be noted that both lengths and the dimensional units are now a part of the axes of the graph. The two dimensional axes are usually identified as the x-axis running horizontally across the page and the y-axis which runs vertically up and down the page. The axes intersect at the orgin, which has a value of x=0, y=0. For the purpose of this discussion we will only consider the area above the x-axis and to the right of the y-axis; this is known as quadrant I.

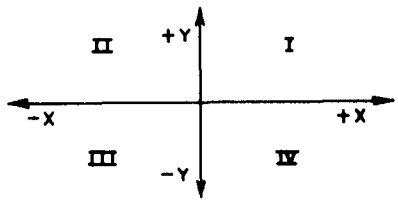

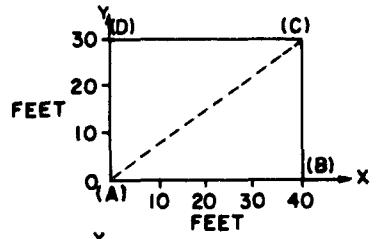

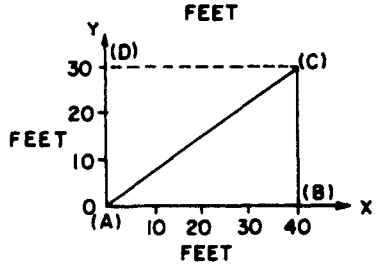

1. INTUITIVE TRIGONOMETRY AND CALCULUS (Cont'd.)

Line AC now runs from the origin (A) (X=0, Y=0) to point (C) (X=40, Y=30). We could then describe this line by its X-Y coordinates; in this case $(X_A, Y_A) = (X_1, Y_1) = (0, 0)$ and $(X_C, Y_C) = (X_2, Y_2) = (40, 30)$. The area of these figures would be calculated as follows: rectangle-$(X_2 - X_1)(Y_2 - Y_1) = (40-0)(30-0) = 40\ 30 = 1200$ sq. ft. ; triangle - $1/2\ (X_2-X)\ (Y_2-Y_1) = 1/2\ (40-0)\ (30-0) = 1/2\ (40)\ (30) = 600$ sq. ft.

From the above we can develop the situation where a series of discrete or finite areas are enclosed by connecting straight lines. The process of adding all of these areas is called graphical summation or integration.

EXAMPLE PROBLEM I.

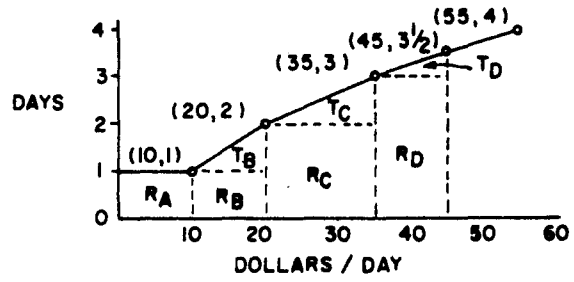

A special tool is shipped for installation of materials purchased from a supplier. A premium is placed on the rental if this tool is not returned promptly. What percentage increase per day develops if the tool is kept 3-1/2 days instead of 1 day?

Solution: Divide the graph into triangles and rectangles and add the areas to 3-1/2 days. This can generally be stated as:

$$\sum_{1\ \text{day}}^{3\text{-}1/2\ \text{days}} \text{days} \times \left[\frac{\text{dollars}}{\text{day}}\right] \text{ or } \sum_{d=1}^{3\text{-}1/2} d \times \$/\text{day}$$

$R_A = 1 \times \$10 = \$10.00$, $R_B = 1 \times \$10 = \$10.00$

$T_A = 0 = \frac{0.00}{\$10.00}$, $T_B = 1/2 \times 1 \times \$10 = \frac{5.00}{\$15.00}$

$R_C = 2 \times \$15 = \$30.00$, $R_D = 3 \times \$10 = \$30.00$

$T_C = 1/2 \times 1 \times \$15 = \frac{7.50}{\$37.50}$, $T_D = 1/2 \times 1/2 \times \$10 = \frac{2.50}{\$32.50}$

$\$10.00 + \$15.00 + \$37.50 + \$32.50 = \$95.00$

Cost for 3-1/2 days $= \frac{\$95.00}{3.5\ \text{days}} = \$27.14$/day; cost for one day = \$10.00

Percent increase in cost per day $= \frac{\$27.14}{\$10.00} - 2.714 = 271.4\%$

1. INTUITIVE TRIGONOMETRY AND CALCULUS (Cont'd.)

In this particular example both the values on the X-axis (Dollars/Day) and the Y-axis (days) were incremented by finite amounts. These increments are called deltas and indicated by ΔX or ΔY. The line beginning at the origin and running up and to the left is called the graph of the function or a function line. This can be indicated by noting that going from one day to two days $\Delta Y = 1$. Where the horizontal lines drawn from one day and two days intersect the function line and are projected to the X-axis, $\Delta X = 10$. We could then say that the slope of this section of the function is $(2-1)/(20-10)=0.10$. It should also be seen that $\Delta Y/\Delta X$ also equals $1/10=0.10$. In this case the dimensional unit $-$days/ (dollars/day) = $(\text{days})^2$/dollar is meaningless; in cases such as distance vs. time or velocity vs. time, the slope of the described function takes on a real physical meaning.

We have now reached the stage where integral and differential calculus can be discussed. For the previous case a function that consisted of a series of connected straight lines was plotted and the area under this function was calculated by summing the discrete portions. Calculus has its greatest advantages in that this area can be found by mathamatical manipulations which are usually quicker and more accurate than our previous methods. In addition, most physical activities, especially those that are dependent upon time, are continuous functions. This means that changes follow curved paths rather than abrupt linear changes.

The changes in the functions are described by differentials. A differential is denoted by dy or dx rather than ΔY or ΔX ; this is done by reducing ΔX or ΔY approximately to zero. If we take a ratio of $\Delta Y/\Delta X$, and have ΔX approach zero in size, the ΔY also becomes smaller. We can then describe this ratio as dy/dx - a differential. The graphs shown below will clarify this.

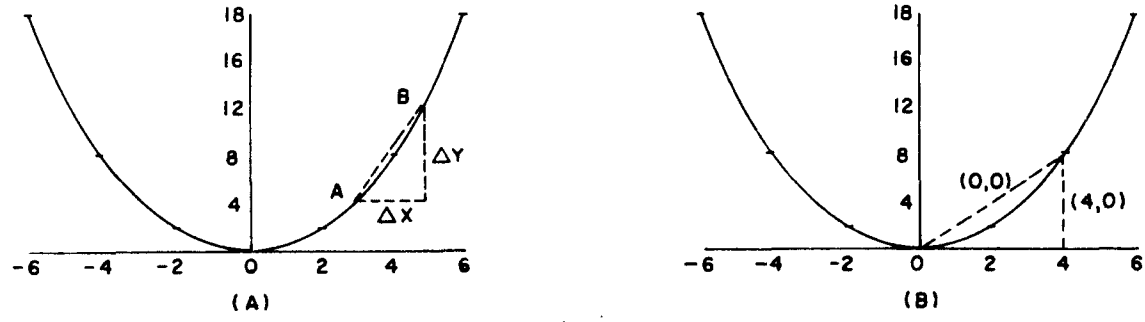

1. INTUITIVE TRIGONOMETRY AND CALCULUS (Cont'd.)

$$Y = f(X) = 1/2\ X^2$$

$$Y' = f'(X) = \frac{dy}{dx} = 2\ 1/2 \times X = X$$

For the above situation, let's start the same approach as for the graphical method. Connect points "A" and "B", form Δx and Δy, and get the slope $\Delta y / \Delta x$. If the coordinates at "A" are (x,y) then "B" is at $(x + \Delta x, y + \Delta y)$. We can then reduce Δx, so that

$$\frac{dy}{dx} = \lim_{\Delta x \to 0} \frac{\Delta y}{\Delta x} = \lim_{\Delta x \to 0} f\ \frac{(x + \Delta x) - f(x)}{\Delta x}$$

In figure (a), calculus is applied and the area under the curve between x=0 and x=4 is found as follows:

$$A = \int_{x_1}^{x_2} f(x)\,dx = \int_0^4 1/2\ x^2\,dx = 1/2 \times \left[\frac{x^2 x}{3}\right]_0^4 = 1/6(64-0) = 10.67$$

According to graphical methods, we could follow a number of procedures:

(1) One step - $A = 1/2 \times (4-0) \times (8-0) = 16.00$

(2) Two equal X-divisions - $A = \underset{0-2}{1/2 \times (2-0) \times (2-0)} + \underset{2-4}{(4-2) \times (2-0) + 1/2 \times (4-2) \times (8-2)} = 12.00$

(3) Four equal X- divisions - $A = \underset{0-1}{1/2 \times (1-0) \times (1/2-0)} + \underset{1-2}{(2-1) \times (1/2-0) + 1/2 \times (2-1) \times (2-1/2)} + \underset{2-3}{(3-2) \times (3-0) + 1/2 \times (3-2) \times (4\,1/2-3)} + \underset{3-4}{(4-3) \times (4\,1/2 - 0) + 1/2 \times (4-3) \times (8 - 4\,1/2)} = 11.50$

Three things should become immediately evident: (1) As the number of increments increases, the area by the graphical method approaches that of the calculus method; (2) As the number of increments increases between 0 and 4, $\Delta x \to dx \to 0$ (3) The slopes of the linear segments continuously vary both with respect to the number of increments and with respect to adjacent increments.

It can then be concluded that: (1) In many instances empirical or graphical approximations, when judiciously applied, can be substituted for mathematical situations which are ambiguous or exceptionally sophisticated. (2) We intuitively use these methods at various levels in walking (selecting a minimum path), bowling (adjusting back foot, reaching spot, and the path of the ball to the pocket - hopefully), and driving (creating a multi-dimensional system of our car,

other vehicles, traffic signals, road and automobile characteristics, plus a sprinkling of statistics to anticipate how all of the components should act or react while they are included in the system).

2. VELOCITY

Velocity represents a change of displacement* with respect to time. It may be represented mathematically as:

$$V = \frac{ds}{dt}$$ a slope, a tangent, or a derivative

Where "S" represents displacement and "t" represents time.

Since displacement is a vector quantity, it is sometimes customary to denote direction in detailed calculations.

eg. V = 40 mph EAST

Speed is a scalar quantity and has magnitude, but no direction, associated with it.

Ordinarily velocity and speed are used interchangeably.

3. ACCELERATION

Acceleration is defined as the time rate of change of velocity, also a derivative.

$$a = \frac{dv}{dt} = \frac{d}{dt}(v)$$

But note that $V = \frac{ds}{dt}$ $\quad a = \frac{d}{dt}\left(\frac{ds}{dt}\right) = \frac{d^2s}{dt^2}$ or the second derivative of **displacement**

Since velocity was shown to be a vector quantity, acceleration is also seen to be a vector quantity. Acceleration is a positive quantity. Negative acceleration is deceleration.

---

* Displacement: To define displacement note that measurement of displacement implies direction as well as magnitude. In studies of motion, a vector is defined as a quantity having both direction and magnitude.

3. ACCELERATION (Cont'd.)

There are many engineering problems where moving bodies have constant or nearly constant acceleration. It can be demonstrated that freight cars do not have a constant acceleration. Friction, windage, temperature and gradients do not remain constant, therefore, acceleration is not constant.** However, to reduce the problem of car behavior to more manageable proportions, a straight line approximation - or constant acceleration - is desirable. A more thorough discussion of car behavior equations will show the limits of variable acceleration and the practical value of making the straight line approximation.

For uniformly accelerated motion there are a number of useful relationships which can be developed. With the help of a little algebra and calculus* on the basic relationship, $a = \frac{dv}{dt}$, the following formulas fall out.

(1) $V_f = V_i + at$

where V_f = final velocity, and V_i is initial velocity.

(2) $S = V_i t = 1/2\ at^2$

(3) $V_f^2 = V_i^2 + 2as$

Number (3) is the basic formula used in the development of classification yard automation.

---

* Not given except to answer some specific question:

$dv = adt$

$$\int_{V_i}^{V_f} dv = a\int_{o}^{t} dt = V_f - V_i = at \qquad (1)$$

$ds = v\,dt$, $ds = (V_i + at)\,dt$

$$\int_{o}^{s} ds = \int_{o}^{t} (V_i + at)\,dt \ , \ s = V_i t + 1/2at^2 \qquad (2)$$

Since $V_f = (V_i + at)$ $S = \frac{(V_f + V_i)}{2}$

S = (average velocity) (t)

taking $v = \frac{ds}{dt}$ and $a = \frac{dv}{dt}$ and eliminating dt

we have $v\,dv = a\,ds$

$$\int_{V_i}^{V_f} v\,dv = a\int_{o}^{s} ds \quad \text{or} \quad V_f^2 - V_i^2 = 2as$$

$$\text{or } V_f^2 = V_i^2 + 2as \qquad (3)$$

** - See RDC paper AIEE.

4. FREELY FALLING BODIES

The velocity of a freely falling body tends to increase because of the effect of gravity.

$$(4)\quad V_f^2 = V_i^2 + 2gh$$

This formula is derived by replacing quantities in the formula

$$V_f^2 = V_i^2 + 2as$$

For relatively slowly falling bodies the effect of air friction on acceleration can be ignored. "g" is equal to 32.2 ft/(sec)^2 (approximately) and can be substituted for "a". Distance "s" is replaced by "h". Formula (4) represents the next step in the develpment of velocity relationship for classification yards. The effect of gravity has been introduced.

5. MOTION ALONG A FRICTIONLESS INCLINED PLANE

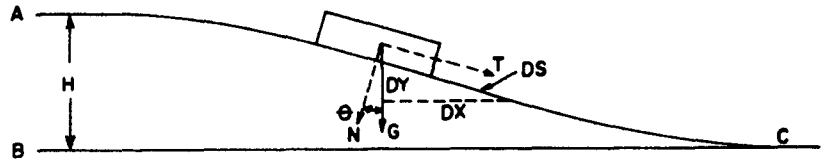

The effective component of acceleration for a body subjected to gravity is: $g \sin \theta$

The acceleration vector g acts with components tangent to the slope and perpendicular to the slope as a function of slope angle.

$$\left(\frac{ds}{dt}\right)\left(d\left[\frac{ds}{dt}\right]\right) = V\,dv = g \sin\theta\, ds$$

$\sin\theta\, ds$ may be replaced by dy, thereby eliminating consideration of the force angle in deriving velocity on the plane

$$v\,dv = g\,dy$$

integrating over the distance A-C, the following is derived:

$$(5)\quad 1/2\,(V_C^2 - V_A^2) = gh \text{ or } V_C^2 - V_A^2 = 2gh$$

which is the same as equation (4).

Acceleration is dependent on the difference in elevation. The time required is greater for a given vertical displacement along the curved path than along a vertical path.

6. FRICTION

Whenever two bodies which are in contact move with respect to each other, a force is set up which acts in the plane of contact in such a way as to prevent the motion. This force is friction and is common for all substances whether solid, fluid, or gaseous.

Friction precludes losses but friction permits traction. Frictional forces may be represented as follows:

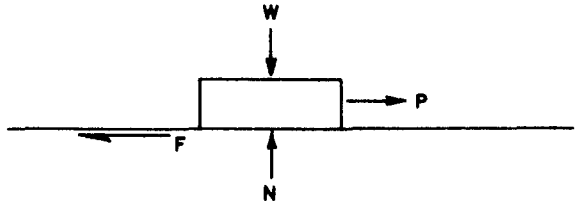

Where "W" is weight, "N" the force of reaction by the plane against "W", "P" a force applied to the block parallel to the plane, and "F" the friction force opposing "P". If the forces are in balance and the block remains stationary, "F" is known as static friction. When "P" overcomes "F" and motion occurs the frictional force is referred to as kinetic friction.

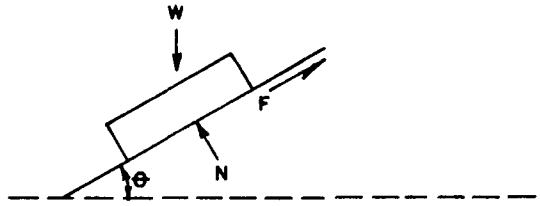

On an inclined plane static friction is $F = W\sin\theta$ available frictional reaction being reduced by the angle θ. As the angle is increased static friction will be overcome and the block slides.

6. FRICTION (Cont'd.)

LAWS OF FRICTION:

1. Frictional force is proportional to normal force which acts between bodies in contact and always opposes motion.

2. Frictional force is independent of the contact area between two bodies.

3. Kinetic friction is independent of the relative velocities of bodies in frictional contact.

4. Static friction force just before motion takes place is somewhat greater than kinetic friction.

5. Ordinary temperature changes affect the coefficient of friction only slightly.

6. Kinetic friction decreases with time because of heating of the rubbing surfaces.

7. Kinetic friction increases with a reversal of motion.

For lubricated surfaces the following laws apply:

1. Frictional force is nearly independent of the normal force which presses the frictional surfaces together.

2. Frictional force is nearly independent of the nature of the frictional surfaces.

3. The frictional force depends primarily on the nature of the lubricant.

4. Friction is not independent of temperature since viscosity of the lubricant is affected by the temperature.

5. Frictional force increases somewhat with an increase of the relative velocity of the frictional surfaces.

7. FORCE EQUALS MASS TIMES ACCELERATION

Newton's Laws

1. Every body continues in its state of rest, or of uniform motion in a straight line, unless it is compelled to change that state by forces impressed on it.

2. The change of motion is proportional to the resultant force impressed and is made in the direction of the straight line in which that force is impressed.

3. To every action there is opposed an equal reaction; or, the mutual actions of two bodies on each other are always equal and directed to contrary parts.

The first and second laws may be combined to state that the acceleration and direction are directly related to the applied vector force. Assuming the weight and the forces of gravity acting on the body produced a fixed mass, it can then be said that force and acceleration are directly proportional. It then follows that, no force would produce an acceleration of zero, the velocity would then remain constant (including the static situation where, the velocity is zero). A constant force would cause a constant acceleration (or deceleration).

The mass of an object is the ratio of its weight to the acceleration of gravity. These same dimensions can then be arranged so that mass is the ratio of an acting force, F (lb.) and any acceleration (ft/sec^2).

8. ENERGY

The energy in a physical system is a reflection of the work done on the system. The work on such a system is expressed in foot-pounds and implies that a finite force has been applied to a body over a finite or measurable distance, this force may be the weight of an object lifted a finite distance.

The energies introduced into such a system may be identified as potential energy, kinetic energy, or a combination of both. There are other changes in energy which are reflected in temperature or conditional changes; these will not be discussed in this section.

Potential energy is that which is stored in a body by virtue of its elevation above a reference line or plane. The sketch on page 8 shows a block of weight resting at a point A a distance of h above line BC.

8. ENERGY (Cont'd.)

If surface AC is frictionless, the potential energy of this body is Wh; this equals both the work necessary to raise the block to point A and the work available as it reaches point C.

Kinetic energy is related to the work involved in changing the velocity of a body moving over a surface. This may be in terms of the accelerating or decelerating forces acting along a finite length of this surface.

As the block slides down the slope there is a gain in kinetic energy and a loss in potential energy. This can be seen by observing that the potential energy at A equals Wh and at C it equals zero. If the velocity at A is so very small as to be practically zero, it will have attained its highest velocity at C.

Position	Potential Energy	Kinetic Energy	Velocity
A	P.E. = Wh	K.E. = 0	0
C	P.E. = 0	K.E. = $1/2mv^2$	$\sqrt{2gh}$
		= $1/2m(2gh)$*	
		= $1/2\ (w/g)\ (2gh)$	
		= Wh	

9. VELOCITY HEAD

From Sections 4, 5, and 8 of this presentation we have seen that a body moving down a sloped or inclined plane has the same acceleration and velocity characteristics as one dropping freely through space. It is important to realize that these characteristics are directly related to their heights, but times for these actions to occur are not equal.

The usual engineering method of expressing the slope of a track or highway is by a term called a gradient. This amounts to expressing the rise or fall of the line per 100 feet of horizontal length. An example of this would be that a track that falls 3 feet in 200 feet would have a gradient of 1.5%.

Because of the ease in determining velocities from graphical and tabular sources, a conversion factor called a velocity head is used. This amounts to showing the velocity which is available after the body has fallen a certain distance from an originating energy level or position (potential energy). It is also an indication

---

* - See Page 8

9. VELOCITY HEAD (Cont'd.)

of the amount of rise which a certain velocity will impart (kinetic energy). The conversion from the previously presented velocity equations (based on feet per second) to the more commonly used (based on miles per hour) equations is as follows:

$$V^2 = 2gh$$
$$= (2\ 32.2\ h)\ (ft/sec^2)\ (ft)$$
$$= 64.4\ h\ ft^2/sec^2$$
$$V = 64.4\ h\ \ ft/sec$$

$$h = \frac{V^2 ft}{64.4} = (0.0155v^2)ft.$$

$$V^2 = 2gh$$
$$= (2\ 32.2\ h)\ (ft/sec^2)\ (ft) \left[\frac{1\ mi}{5280\ ft}\right]^2 \left[\frac{3600\ sec}{hr}\right]^2$$
$$V = \sqrt{29.94\ h\ mi^2/hr^2}$$
$$= 29.94\ h\ mi/hr$$

$$h = \frac{V^2}{29.94} ft = (9.9334V^2)ft.$$

It is now possible to calculate the velocity of a "0" resistance car rolling down a frictionless track. To make a nearly practical problem: let us determine the leaving velocity of a car that rolls 200 feet down a track which has a gradient of -2.25%. An additional factor is that the car had a velocity of 2.12 mph as it entered this section of track.

EXAMPLE PROBLEM II

$$h\ (entering) = 0.0334V^2 = (0.0334)\ (2.12)^2 = 0.15$$

$$h\ (increasing) = 200\ ft.\ @\ 2.25\% = \frac{4.50}{4.65}$$

$$V = 29.94 \times 4.65 = 11.79\ mph$$

Making use of graphs and the Velocity Head Tables for Retarder Yard Calculations, we have as follows:

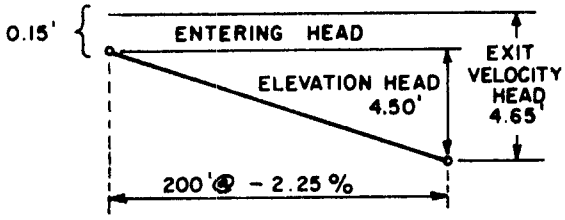

(1) H= 0.15 for 2.12 mph - tables
(3) Show entering velocity head on graph
(4) Total exit velocity head from graph h = 4.65
(5) Exit velocity from tables = 11.79 mph

Since velocities, or potential velocities, can be expressed in feet of head, then gradients can be used to indicate increases, or decreases, in velocities. These gradients can be expressed in percentages, as previously described, or as force relationships of pounds per ton. From the sketch below, we can convert a gradient expressed in percentages to one expressed in pounds per ton.

9. VELOCITY HEAD (Cont'd.)

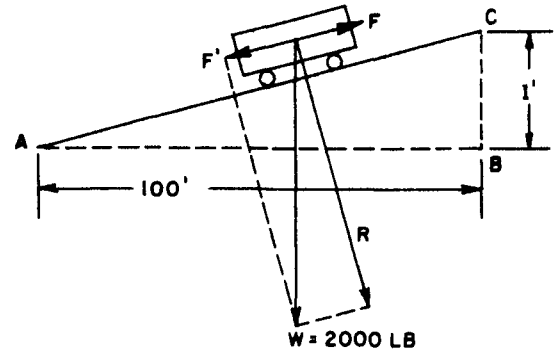

UNIT GRADE RESISTANCE

Above, a car of weight W is considered on a frictionless incline. The forces of gravity may be resolved into two components, F' tending to roll the car downhill and R normal to the face of the incline. To overcome F' and keep the car from rolling downhill, F' must be opposed by an equal and opposite force F. A relation may be established between similar force and distance triangles so that $F'/W = CB/AB$. But for a 1 percent grade, CB=1 and AC=AB, approximately, making AC 100 ft approximately. Also F'=F. Letting W=2000 lb.

$$F = \frac{2000 \times 1}{100}$$

F = 20 lb/t./percent of grade

10. CAR RESISTANCES

Car resistance at a constant velocity, includes (1) journal friction; (2) rolling friction or resistance; (3) track resistance; (4) head, tail, and side resistance of the atmosphere.

(1) Journal friction is a maximum of 15 or 20 pounds per ton at a velocity of 0+ just after starting from rest; it is not nearly so much when slowing down from motion to 0+ or after a momentary stop. From this maximum it falls rapidly as the velocity increases to an unknown minimum possibly approximating 2 pounds per ton. It is very much affected by temperature, and if a minimum of 2 pounds is realized in summer temperature, it is very probable that the minimum may be 4 to 6 pounds in winter weather. It varies very little with velocity if the speed is above 6 or 8 miles an hour. It depends very much on the character of the lubrication and the condition of the bearings. Roller or ball bearings are designed to reduce this particular resistance.

(2) Rolling resistance results in part from friction between the wheel tread and the head of the rail. A certain minute amount of flattening of the surfaces in contact also contributes. The value of rolling resistance is a function of the coefficient of rolling friction between metals which decreases as the load is

10. CAR RESISTANCES (Cont'd.)

increased. Rolling friction is subject to too many variables for a direct mathematical determination. Types of metals in wheel and rail, conditions of wheels, tracks, and rail surfaces-whether dirty or clean, wet, oily, rusted, or frosty - affect the coefficient of rolling friction.

(3) When a track is stressed by the load of a single wheel or a group of wheels closely spaced as in a car truck, the track is depressed in proportion to the loading and the the stiffness of the track structure. In the depressed position, the track and supported rail have a reverse upward bending immediately in front of the point where the wheel and rail make contact. The wheel is in effect "running up hill." The deflection and reverse bending thus encountered absorb some of the energy from and add resistance to the movement of the train and form a component of that resistance which varies with the applied load on the axles. Experiments have shown the value of track resistance to vary from a small fraction of a pound to as much as 1.5 lb per ton. Even on tangent track, the flange of a wheel comes in contact with the head of the rail and creates a retarding force. The path of a car or locomotive on a stretch of tangent track is not a straight line. Instead it follows a zigzag path, moving from one rail to the other within the limits of wheel gage tolerance or play. This so called nosing action results in the flange resistance which constitutes a part of the second element of train resistance. Swaying, concussion, and oscillation of the cars add other losses. The effects of these factors, which are intensified by poor track conditions, vary directly as the speed.

(4) A head wind of velocity equal to that of the train would increase the resistance four times; a side wind would have an unknown effect which could be quite large. Atmospheric resistance on the side of cars consists of two parts: First, the skin friction, and second, the flange resistance due to a side wind pushing the car flange against the rail. Skin friction is similar to the pull required to pull a rope through a tank of cold molasses. Flange resistance is a function both of the square of the speed and of the coefficient of rolling flanges against rail. The values vary with local conditions. Tail resistance is due to turbulence and partial vacuums developing towards the rear and underneath the car; open doors would also be involved here.

10. CAR RESISTANCES (Cont'd.)

The present A.R.E.A. standard for the maximum car resistance of hard-rolling, brake-free cars in Northern climates is 28 pounds per ton - this determines the amount of drop between crest and clearance. The A.R.E.A. minimum resistance value is 3 pounds per ton - this determines the amount of retardation necessary. There are certain variations on these that occur. These variations include the reduction of the maximum resistances as the customers (railroads) require and reducing the minimum resistance to 2 pounds per ton at the U.S.& S.'s judgement. The latter variation is based on the assumption that more heavy, roller bearing cars are placed in service each year and this conservatism will yield a yard of longer useful life with fewer overspeed couplings. This 2 pounds per ton resistance is the basis for specifying a 0.1% body track grade which will maintain clearance point velocities for easy moving cars.

Other modifications in these resistances are based on the configuration of the yard. Among these are a reduction of the maximum Northern Climate resistance to 18 pounds per ton between the ends of the retarders and the clearance points for group, master-group, and other such multiple unit retardation schemes. We presently increase the total amount of resistance by 0.06 feet per switch below the last retarder and increase the resistance for all curvature traversed (crest to clearance) by adding a correction to the tangent resistance. This curvature correction amounts to 0.045 feet per degree of central angle for high resistance cars and 0.025 feet per degree of central angle for low resistance cars.

Example Problem III

Using Figure B on Page 18, determine the drop from crest to clearance and the amount of retardation necessary for a yard which will function in a Northern Climate. The throughput is expected to be a maximum of 2 cars per minute. Allowable coupling speed is 4 mph and there will be no deceleration between the retarders and clearance.

(1) Determine initial V(elocity) H(ead)

$$\frac{2 \text{ cars}}{\text{minute}} \times \frac{60 \text{ minutes}}{\text{hour}} \times \frac{50 \text{ ft}}{\text{car}} \times \frac{1 \text{ mile}}{5280 \text{ ft}} = 1.14 \text{ mph}$$

From Velocity Head Tables 1.14 mph = 0.04 feet of head

10. CAR RESISTANCES (Cont'd.)

(2) Fill in form TR600, using information indicated on the plan and the data on the turnout sheets.

Refinements such as minimum physical gradients through the retarders, vertical curves through the hump and retarders, turnout and (car performance measuring area) straight line restrictions are integral design factors outside the scope of this discussion. Simplifying assumptions used in this section are that all retarders are 16 feet long and remove 1.00 foot of head per section.

Another method of getting a feel for resistances is to determine the amount of velocity head to be applied for a car of a known resistance to roll a required distance on a level track. This is nominally equal to the hump height requirements. This can be developed from the equation:

$$V.H.\ (ft.) = \frac{R\ (lb/ton) \times D\ (ft.)}{2000\ (lb/ton)}$$

where:

V.H. = Velocity head
R = Resistance-either car only, or that corrected for switches, curves, etc.
D = Distance to Roll

EXAMPLE PROBLEM IV

Determine the necessary Velocity Head for a car with a resistance of 25#/T. to roll 4800 feet.

$$V.H. = \frac{25 \times 4800}{2000} = 60\ ft.$$

Through these steps you should have developed an insight into appreciating the theoretical characteristics of cars rolling freely over tracks and developed a method by which approximations of their performance can be easily determined from graphs and tables.

The succeeding sections will more fully develop the variations of performance due to track and car characteristics and their interrelationships.

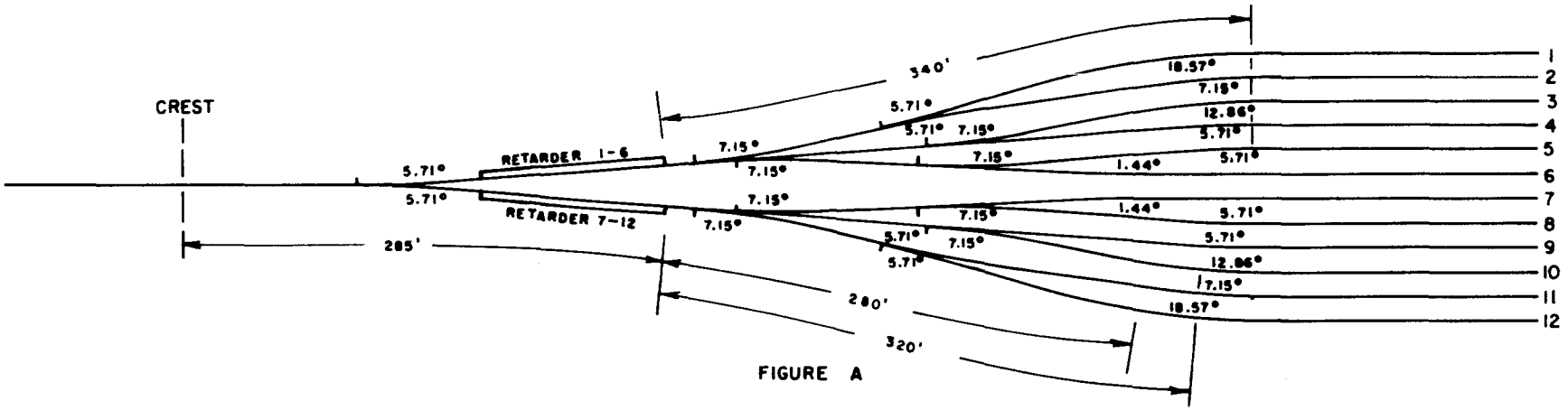

FIGURE A

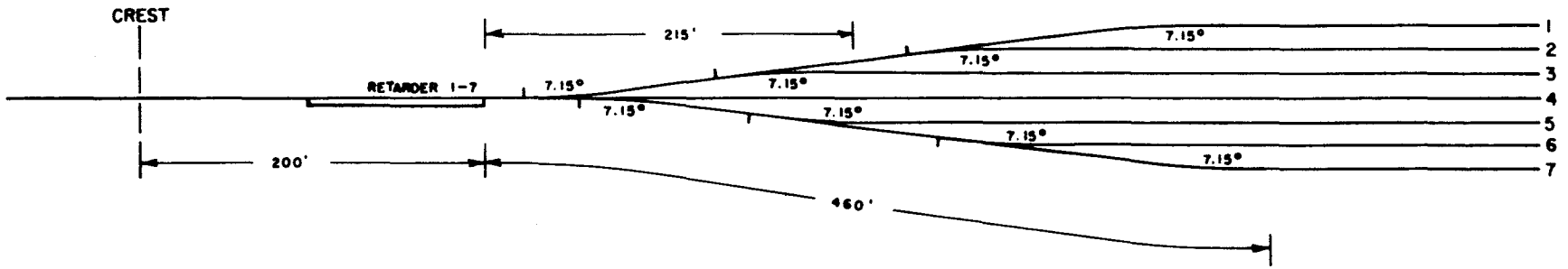

FIGURE B

PROPOSED
CLASSIFICATION YARDS
SCALE 1" = 100'
USBS DIV OF WABCO
12-29-65

Example Problem III

TR 600

R.R. P.D.&Q

Yard Back

Plan Figure B

(Dated or Rev.) 12/29/65

Calc. by J.Z.

Date 12/29/65

Track 7

Group —

For Northern Climates

	Maximum Resistance		Minimum Resistance	
Crest to End ret.	200' @ 1.4%	= 2.80	200' @ ~~0.3%~~ 0.1%	= 0.20
	0 ° @ .045'/o	= —	0 ° @ .025'/o	= —
	Sub Total	= 2.80	Total	= 0.20
End ret. Clear	460 @ 0.9%	= 4.14		
	1438 @ .045'/o	= 0.64		
	4 sw. @ .06'/sw.	= 0.24		
	Sub Total	= 5.02		
	Total	= 7.82		
	Less initial V.H. 4 mph	= 0.04		
	Drop crest to clear	= 7.78		
	Less drop end ret. to cl.	= 0.34		
	Drop crest to end ret.	= 7.44		
	Less min. res. crest to end ret.	= 0.20		
		7.24		
	Add initial V.H.	= 0.04		
	Stopping Retardation Required	= 7.28		
	Less V.H. - ret. lvng. Spd. 4 mph	= 0.54		
	Net Retardation required	= 6.74		

Track 4

215' @ ~~0.15%~~ 0.1% = 0.22

0 ° @ .025'/o = —

2 sw. @ .06'/sw. = 0.12

Sub Total = 0.34

Less dec. 4 mph to 4 mph = 0.00

Drop end ret. to cl. = 0.34

$\frac{6.74}{1.00} = 6.74 \rightarrow$ Use 7

Rev. 11/15/65

UNION SWITCH & SIGNAL DIVISION - WABCO

YARDS & TERMINALS ORIENTATION

PHYSICS

Dynamics

Homework Problems

1. A car with a resistance of 28#/T rolls onto a straight level track at 8 mph. How far will it roll?

2. Determine the crest to clearance drop and the amount of retardation necessary for the following conditions:

   Throughput - 4 (50 ft.) cars/minute
   Northern Climate resistances
   Configuration - Figure A, page 18 of Dynamics booklet
   Maximum clearance speed - 4 mph

3. A small yard (Figure B, page 18 of Dynamics booklet) is to handle 3 (50 ft.) cars/minute with a maximum clearance speed of 5 mph. If the hump height is 6.63 feet, determine the maximum car resistances and the number of retarder sections necessary for satisfactory operation. Assume that the maximum rolling resistance from crest to end of retarders is 1.6 times the maximum rolling resistance from end of retarders to clearance.

TR 600

R.R._____

Yard_____

Plan_____

(Dated or Rev.)_____

Calc. by_____

Date_____

Track_____

Group_____

For Northern Climates

	Maximum Resistance		Minimum Resistance	
Crest to End ret.	____' @ 1.4% =	_____	____' @ 0.3% =	_____
	____° @ .045'/° =	_____	____° @ .025'/° =	_____
	Sub Total =	_____	Total =	_____
End ret. to Clear	____' @ 0.9% =	_____		
	____° @ .045'/° =	_____		
	____sw. @ .06'/sw. =	_____		
	Sub Total =	_____		
	Total =	_____		
	Less initial V.H.___mph =	_____		
	Drop crest to clear =	_____		
	Less drop end ret. to cl. =	_____		
	Drop crest to end ret. =	_____		
	Less min. res. crest to end ret. =	_____		
		_____		
	Add initial V.H. =	_____		
	Stopping Retardation Required =	_____		
	Less V.H. - ret. lvng. Spd. ___ mph =	_____		
	Net Retardation required =	_____		

Track _____

____' @ 0.15% = _____

____° @ .025'/° = _____

____sw. @ .06'/sw. = _____

Sub Total = _____

Less dec.___mph to___mph = _____

Drop end ret. to cl. = _____

Rev. 11/15/65

TR 600

R.R._____

Yard_____

Plan_____

(Dated or Rev.)_____

Calc. by_____

Date_____

Track_____

Group_____

For Northern Climates

	Maximum Resistance		Minimum Resistance	
Crest to End ret.	____' @ 1.4% =	_____	____' @ 0.3% =	_____
	____° @ .045'/° =	_____	____° @ .025'/° =	_____
	Sub Total =	_____	Total =	_____
End ret. to Clear	____' @ 0.9% =	____		
	____° @ .045'/° =	____		
	____sw. @ .06'/sw. =	____		
	Sub Total =	_____		
	Total =	_____		
	Less initial V.H.___mph =	_____		
	Drop crest to clear =	_____		
	Less drop end ret. to cl. =	_____		
	Drop crest to end ret. =	_____		
	Less min. res. crest to end ret. =	_____		
		_____		
	Add initial V.H. =	_____		
	Stopping Retardation Required =	_____		
	Less V.H. - ret. lvng. Spd. ___ mph =	_____		
	Net Retardation required =	_____		

Track _____

____' @ 0.15% = _____

____° @ .025'/° = _____

____sw. @ .06'/sw. = _____

Sub Total = _____

Less dec.___mph to___mph = _____

Drop end ret. to cl. = _____

Rev. 11/15/65

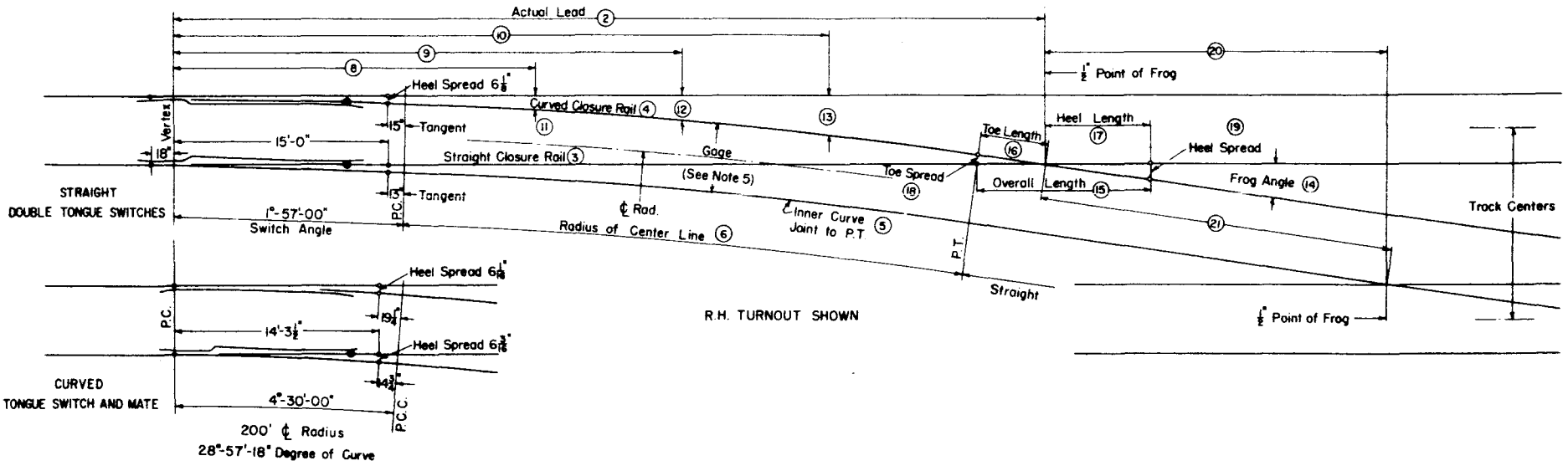

TURNOUT AND CROSSOVER DATA

Type Switch	Col. 1	Col. 2	Col. 3	Col. 4	Col. 5	Col. 6	Col. 7	Col. 8	Col. 9	Col. 10	Col. 11	Col. 12	Col. 13	Col. 1	Col. 14	Col. 15	Col. 16	Col. 17	Col. 18	Col. 19	Col. 20	Col. 21	Col.	Col.
			Closure Distance			Lead Curve		Gage Line Offsets						Properties of Frogs							Data for Crossovers 13°-0" Track Centers		For change of 1'-0" in Track Centers	
	Frog Number	Actual Lead	Straight Closure Rail (See NOTE 6)	Curved Closure Rail (See NOTE 6)	Inner Curve (Joint to P.T.)	Radius of Center Line	Degree of Curve							Frog Number	Frog Angle	Overall Length	Toe Length	Heel Length	Toe Spread	Heel Spread	Straight Track	Crossover Track	Straight Track	Crossover Track
		Ft. In.	Ft. In.	Ft. In.	Ft. In.	Feet	Deg.Min.Sec.	Ft. In.	Ft. In.	Ft. In.	Inches	Inches Ft. In.	Ft. In.		Deg.Min.Sec.	Ft. In.	Ft. In.	Ft. In.	Inches	Inches	Ft. In.	Ft. In.	Ft. In.	Ft. In.
Straight Double Tongue Switches (alignment - above sketch)	4	43-2	24-10	25-2 3/8	24-0 5/8	109.47	54-21-21	21-2	27-4	33-6	9 15/16	17 13/16	2-5 7/8	4	14-15-00	8-0	3-4	4-8	9 7/16	14 3/8	13-2 1/4	14-9 3/4	3-11 1/4	4-0 3/4
	5	49-6	30-11 1/2	31-3 1/16	30-4	179.45	32-21-24	22-9	30-6	38-3	10 5/16	19 3/16	2-7 3/4	5	11-25-16	9-0	3-6 1/2	5-5 1/2	7 15/16	13 5/16	16-10 5/8	18-1 7/8	4-11 7/16	5-0 5/8
	6	55-6	36-9	37-0 1/4	36-2 3/4	268.28	21-28-57	24-2	33-4	42-6	11 1/4	20 1/8	2-8 3/4	6	9-31-38	10-0	3-9	6-3	7	13	20-5 1/2	21-6 1/2	5-11 1/2	6-0 1/2
	7	60-9	41-0 1/2	41-3 1/4	40-7 1/8	366.15	15-41-50	25-3	35-6	45-9	11 3/8	20 5/16	2-8 15/16	7	8-10-16	12-0	4-8 1/2	7-3 1/2	7 7/16	13	24-0 3/8	24-11 3/8	6-11 5/16	7-0 7/16
	8	66-1	46-0	46-2 1/2	45-7 3/8	492.42	11-39-21	26-6	38-0	49-6	12 1/8	21 5/16	2-9 11/16	8	7-09-10	13-0	5-1	7-11	7 1/8	12 3/8	27-7 1/8	28-4 7/8	7-11 3/8	8-0 3/8
	9	70-8	49-3 1/2	49-5 3/4	48-11 1/2	623.81	9-11-41	27-4	39-8	52-0	12 3/4	21 1/2	2-9 3/16	9	6-21-35	16-0	6-4 1/2	9-7 1/2	8	13 3/8	31-1 3/8	31-10 3/8	8-11 11/16	9-0 5/16
	10	75-8	54-3	54-5	53-11 3/8	804.51	7-07-35	28-7	42-2	55-9	12 3/8	22 1/4	2-10 1/16	10	5-43-29	16-6	6-5	10-1	7 3/16	12 3/8	34-8 1/8	35-3 7/8	9-11 11/16	10-0 5/16
Curved Tongue Switch and Mate (alignment - above sketch)	4	39-2	21-6 1/2	21-11 1/2	20-9 1/8	117.02	50-35-19	19-8	25-0	30-4	11 3/8	20 3/8	2-7 7/8	4	14-15-00	8-0	3-4	4-8	9 7/16	14 3/8	13-2 1/4	14-9 3/4	3-11 1/4	4-0 3/4
	5	43-10	26-0	26-4 5/8	25-4 3/4	202.44	28-35-54	20-9	27-3	33-9	12 1/16	22 1/16	2-9 5/8	5	11-25-16	9-0	3-6 1/2	5-5 1/2	7 15/16	13 5/16	16-10 5/8	18-1 7/8	4-11 7/16	5-0 5/8
	6	48-1	30-0 1/2	30-4	29-6 1/2	324.93	17-42-13	21-9	29-3	36-9	13 1/16	23 7/16	2-11 5/16	6	9-31-38	10-0	3-9	6-3	7	13	20-5 1/2	21-6 1/2	5-11 1/2	6-0 1/2
	7	51-8	32-8	32-11 1/8	32-3	486.64	11-47-40	22-5	30-7	38-9	14 3/8	2-0 1/16	2-11 5/8	7	8-10-16	12-0	4-8 1/2	7-3 1/2	7 7/16	13	24-0 3/8	24-11 3/8	6-11 5/16	7-0 7/16
	8	55-2	35-9 1/2	36-0 1/4	35-5 1/8	740.92	7-44-20	23-3	32-2	41-1	14 7/8	2-1 1/16	3-0 1/2	8	7-09-10	13-0	5-1	7-11	7 1/8	12 3/8	27-7 1/8	28-4 7/8	7-11 3/8	8-0 3/8
	9	58-2	37-6	37-8 3/8	37-2 1/2	1111.17	5-09-29	23-8	33-0	42-4	15 5/16	2-1 1/8	3-0 1/2	9	6-21-35	16-0	6-4 1/2	9-7 1/2	8	13 3/8	31-1 3/8	31-10 3/8	8-11 11/16	9-0 5/16
	10	61-3	40-6 1/2	40-9	40-3 1/4	1827.90	3-08-06	24-5	34-6	44-7	15 13/16	2-2 1/4	3-1 5/16	10	5-43-29	16-6	6-5	10-1	7 3/16	12 3/8	34-8 1/8	35-3 7/8	9-11 11/16	10-0 5/16

NOTES

1. For details of STRAIGHT DOUBLE TONGUE SWITCHES for operation of diesel or steam locomotives with two pairs of flanged wheels on driving truck, see Plan Basic No. 987.
2. For details of STRAIGHT DOUBLE TONGUE SWITCHES for operation of locomotives with three pairs of flanged wheels on driving truck; wheel base not exceeding 15'-7" for diesel locomotives or 13'-10" for steam locomotives, see Plan Basic No. 988.
3. For details of STRAIGHT DOUBLE TONGUE SWITCHES for operation of steam locomotives with three or more pairs of flanged wheels on driving truck; wheel base over 13'-0", but not exceeding 19'-0", see Plan Basic No. 989.
4. For details of 200' RADIUS TONGUE SWITCH AND MATE suitable for industrial tracks or locations not subject to through traffic and for operation of diesel or steam locomotives with two pairs of flanged wheels on driving truck, see Plan Basic No. 982.
5. GAGE—The data shown are computed for turnouts out of straight standard 4'-8½" gage track. For turnouts using STRAIGHT DOUBLE TONGUE SWITCHES for operation of locomotives with three or more pairs of flanged wheels on driving truck, the gage shall be widened in accordance with Plan Basic No. 791 at the midway point of the curved closure rail. The widening shall be done by moving the inside curved rail out and tapering the gage to standard 4'-8½" at the heel of the switch and toe of the frog.
6. FROG DESIGNS—For turnouts using solid manganese steel frogs the straight and outside curved closures shall be lengthened to conform.

American Railway Engineering Association

Construction and Maintenance Section
Association of American Railroads

TURNOUT AND CROSSOVER DATA FOR TONGUE SWITCH CONSTRUCTION FOR USE IN PAVEMENT

PLAN NO. 980-60

MANUAL CLASSIFICATION SYSTEM

MANUAL CONTROL OF RETARDER
MANUAL CONTROL OF ROUTE

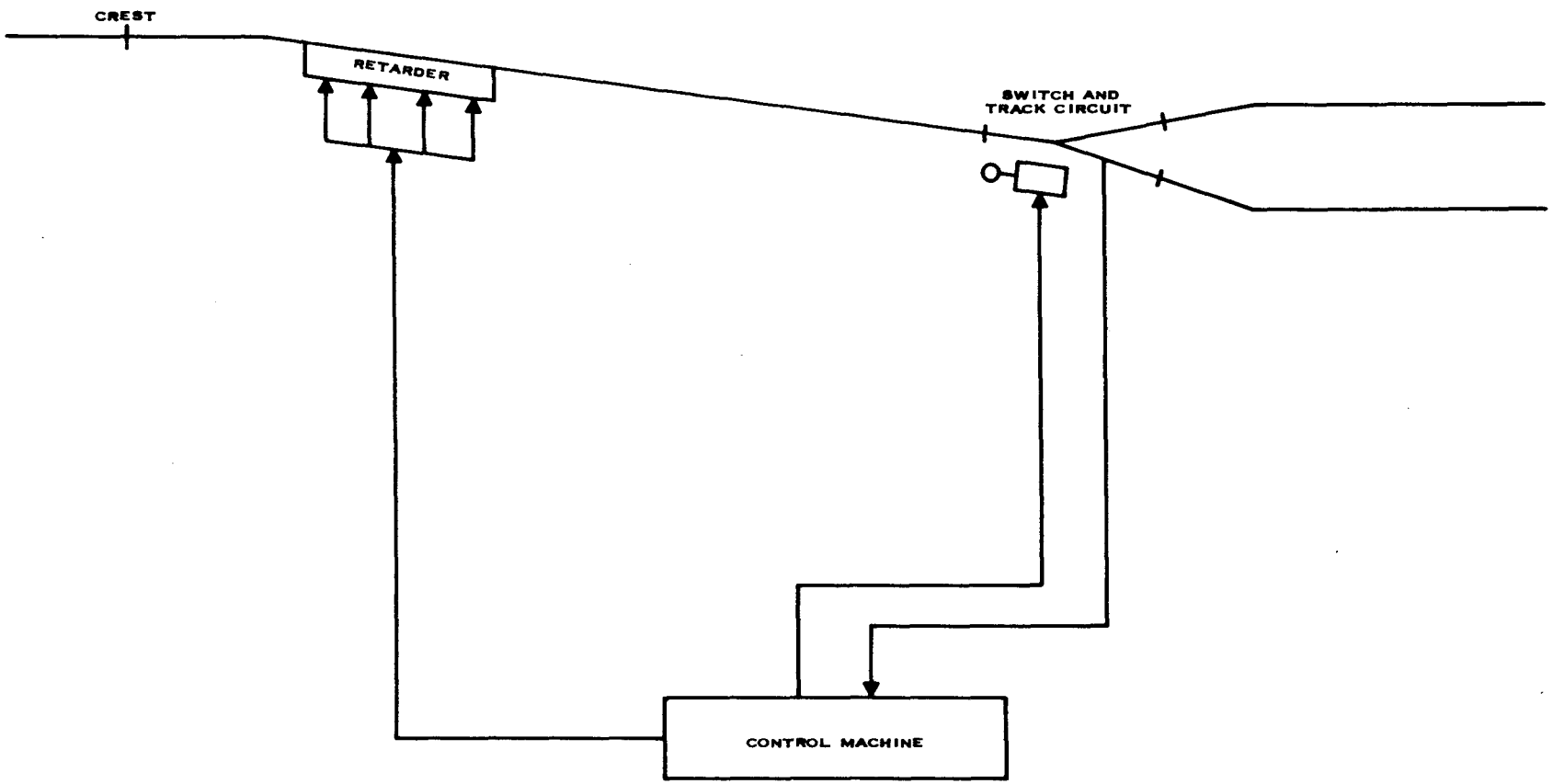

THIS SYSTEM LIMITED TO SMALL INDUSTRIAL OPERATIONS CONSISTING OF A DUMPER AND 3 TO 6 RECEIVING TRACKS.

MANUAL CLASSIFICATION SYSTEM

MANUAL CONTROL OF RETARDER
MANUAL CONTROL OF ROUTE

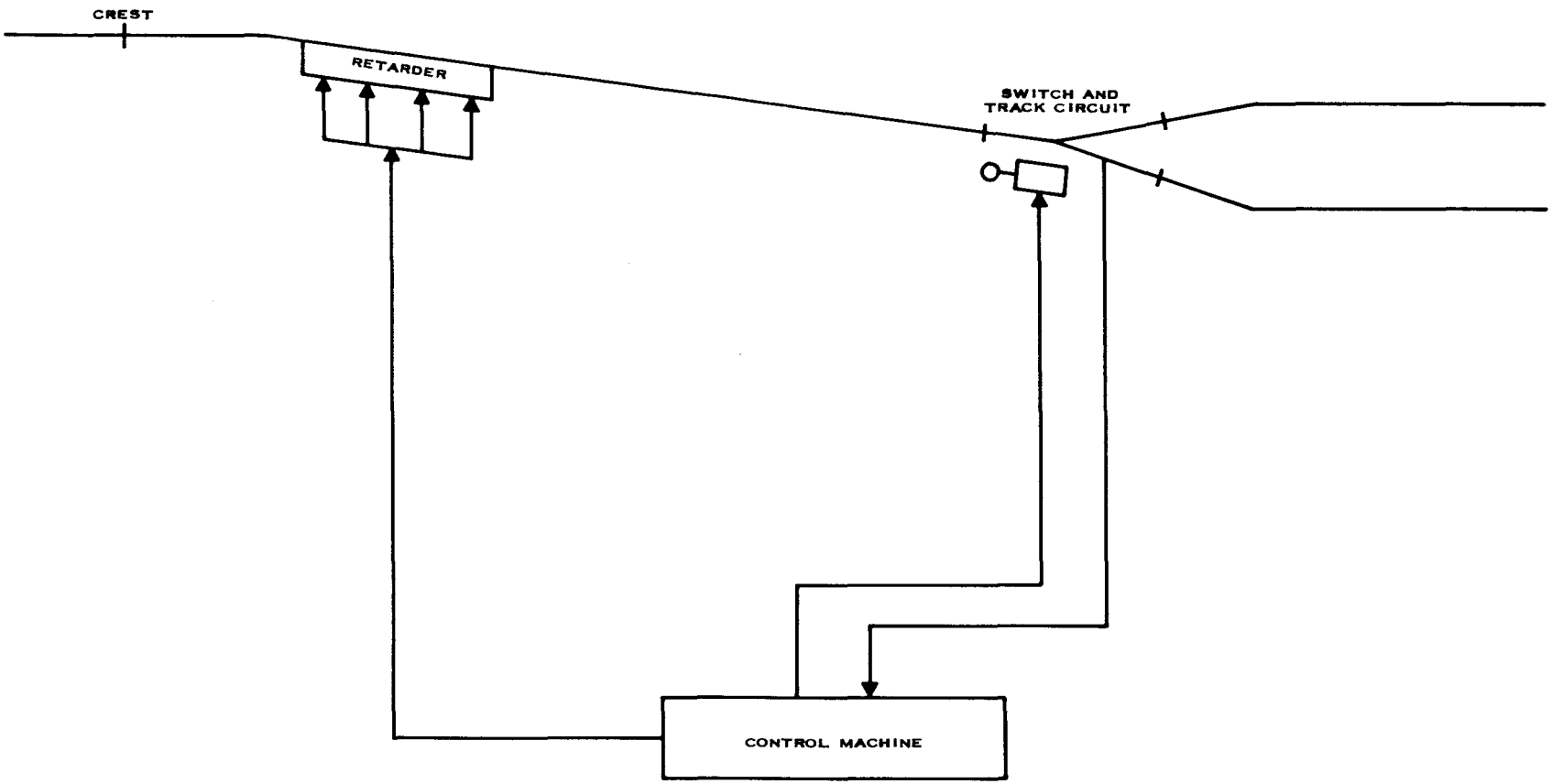

THIS SYSTEM LIMITED TO SMALL INDUSTRIAL OPERATIONS CONSISTING OF A DUMPER AND 3 TO 6 RECEIVING TRACKS.

SEMI-AUTOMATIC CLASSIFICATION SYSTEM

MANUAL CONTROL OF RETARDER
AUTOMATIC CONTROL OF ROUTE

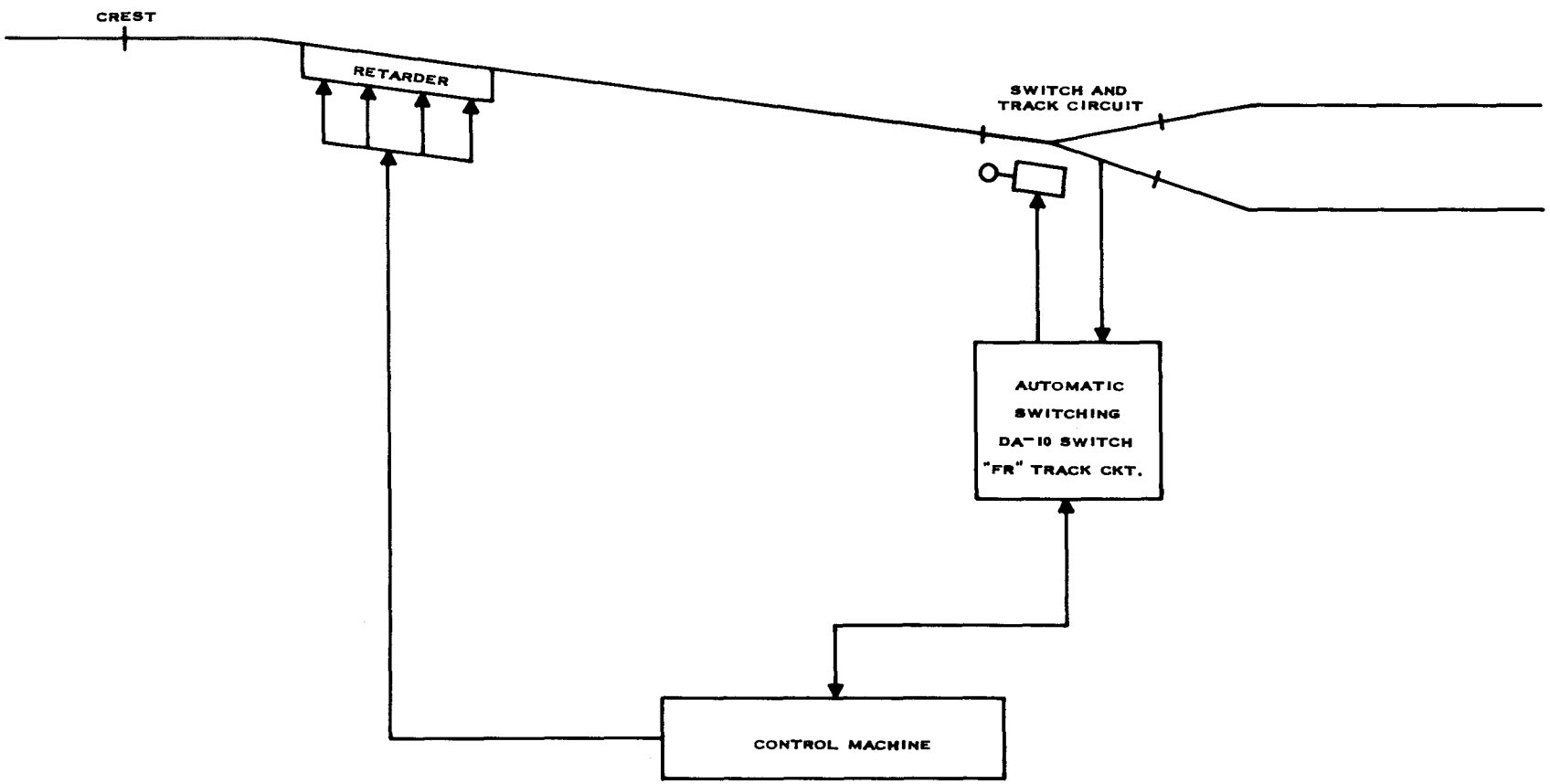

THIS SYSTEM IS FASTER THAN STRAIGHT MANUAL AND IS USUALLY USED IN YARDS HANDLING SAME TYPE MANIFEST AND 400 CARS OR LESS PER DAY.

SEMI-AUTOMATIC CLASSIFICATION SYSTEM

MANUAL PRE-SELECTION OF RETARDER LEAVING SPEED
AUTOMATIC CONTROL OF ROUTE

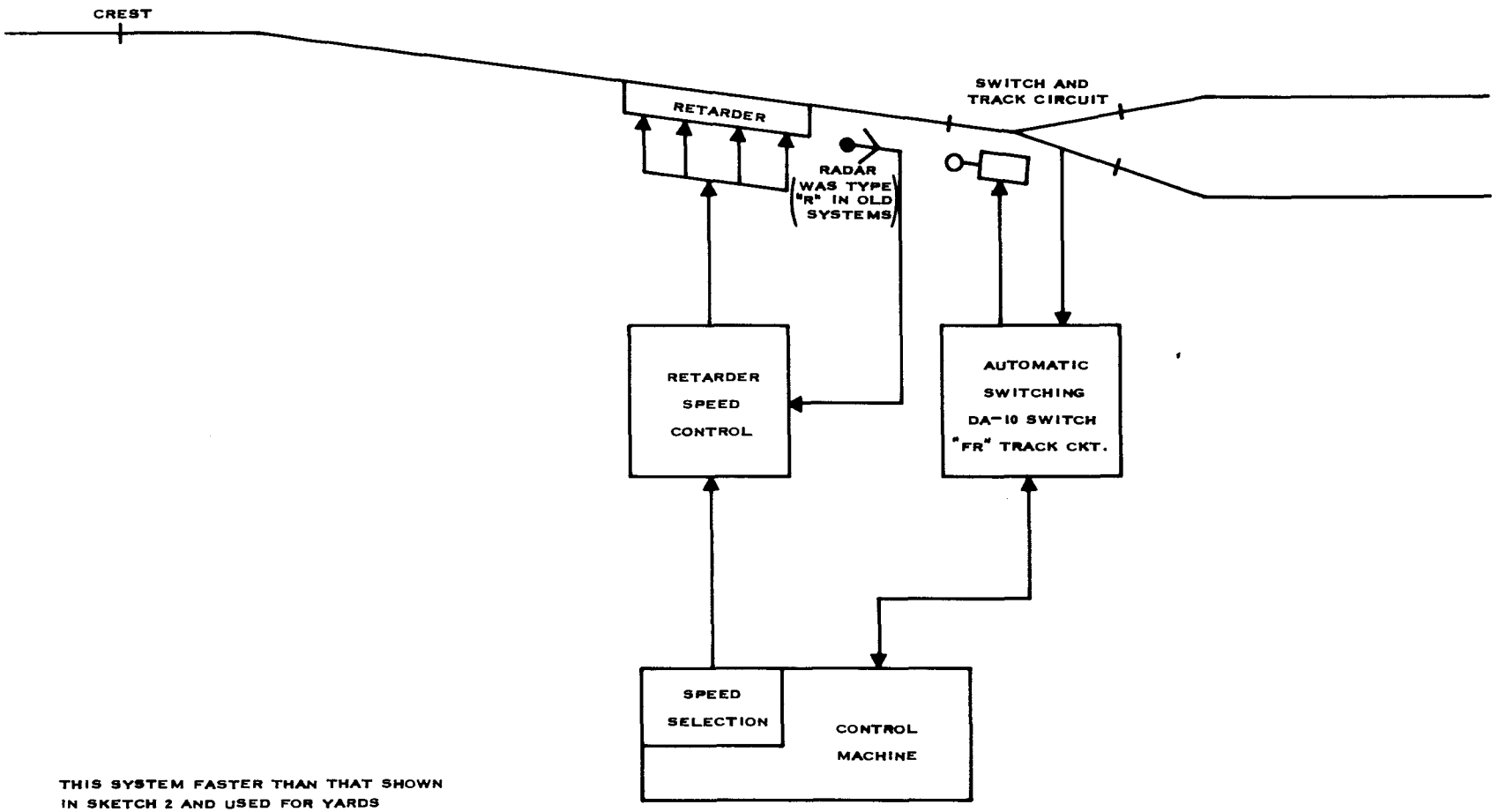

THIS SYSTEM FASTER THAN THAT SHOWN IN SKETCH 2 AND USED FOR YARDS HANDLING 400 TO 1600 CARS DAILY.

SEMI-AUTOMATIC CLASSIFICATION SYSTEM

WEIGHT SELECTION OF MASTER RETARDER LEAVING SPEED
AUTOMATIC CONTROL OF ROUTE
MANUAL SELECTION OF GROUP RETARDER LEAVING SPEED

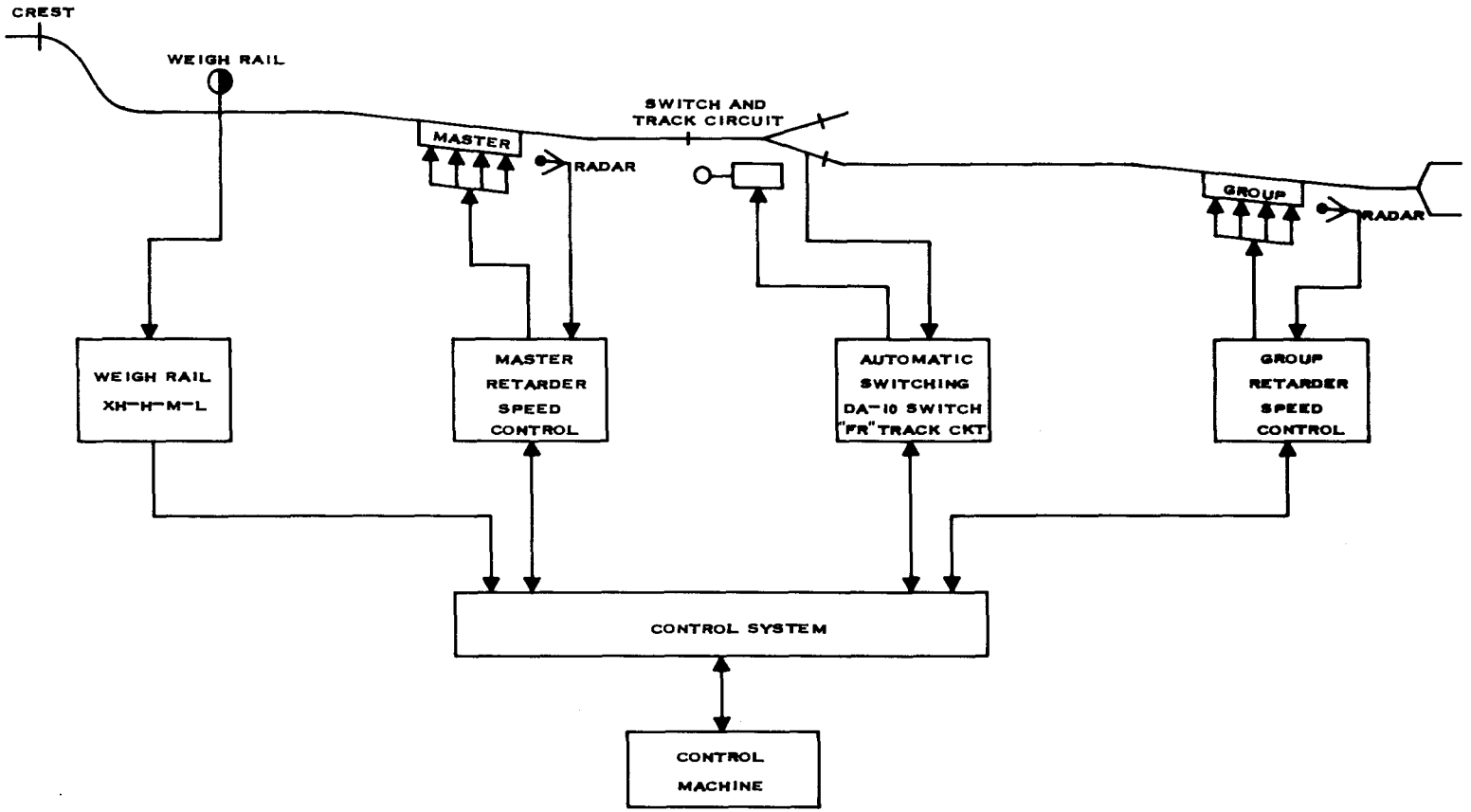

THIS SYSTEM IS A REFINEMENT OVER THAT SHOWN IN SKETCH 3. IT GIVES FASTER HUMPING RATE AND BETTER SPEED CONTROL.

TYPE VR AUTOMATIC CLASSIFICATION SYSTEM

WEIGHT SELECTION OF MASTER RETARDER LEAVING SPEED
AUTOMATIC CONTROL OF ROUTE
COMPUTER CALCULATION OF GROUP RETARDER LEAVING SPEED

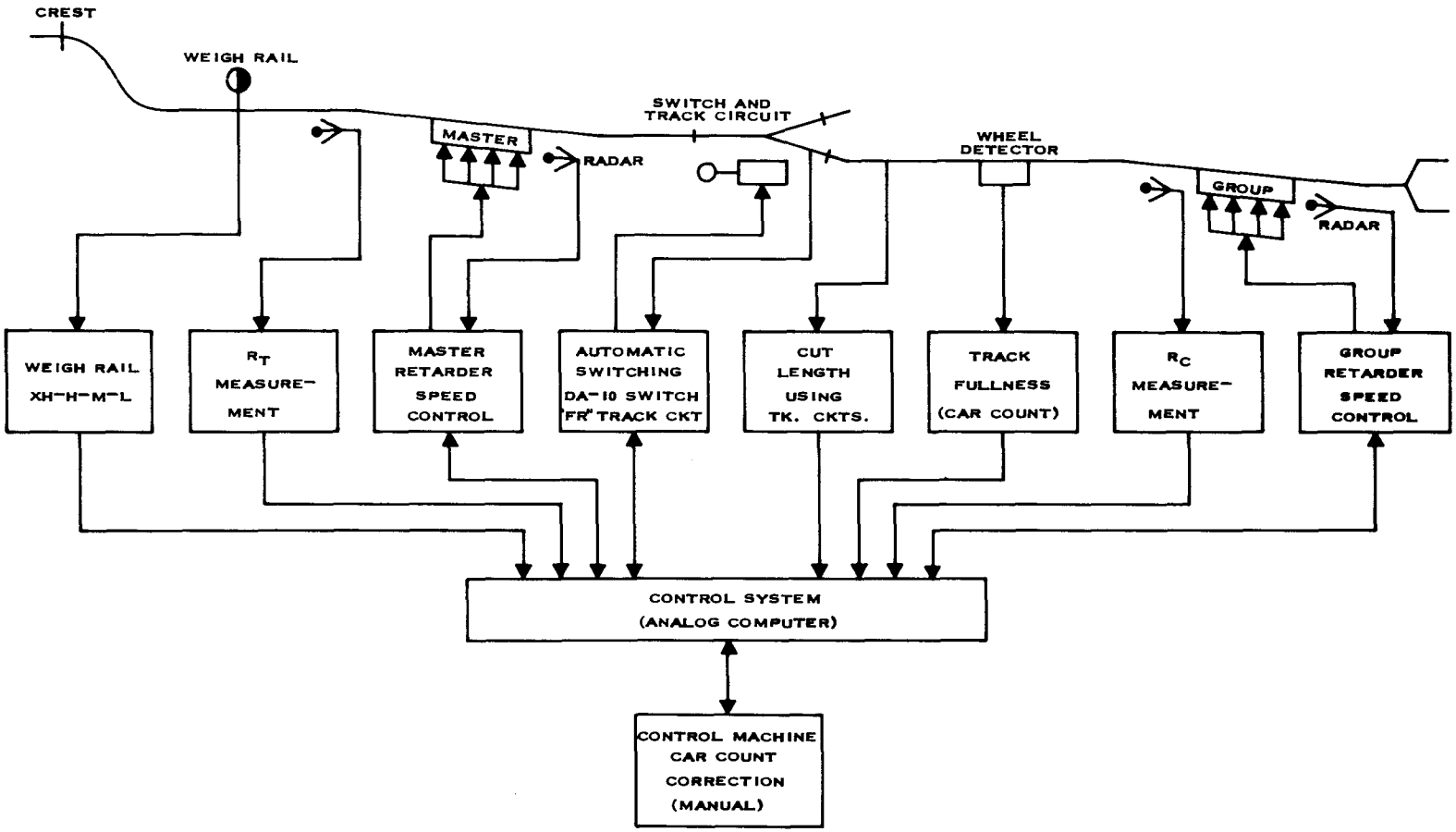

TYPE VR-1, VR-1A AND VR-2 AUTOMATIC CLASSIFICATION SYSTEM

MASTER RETARDER "MAGIC X"

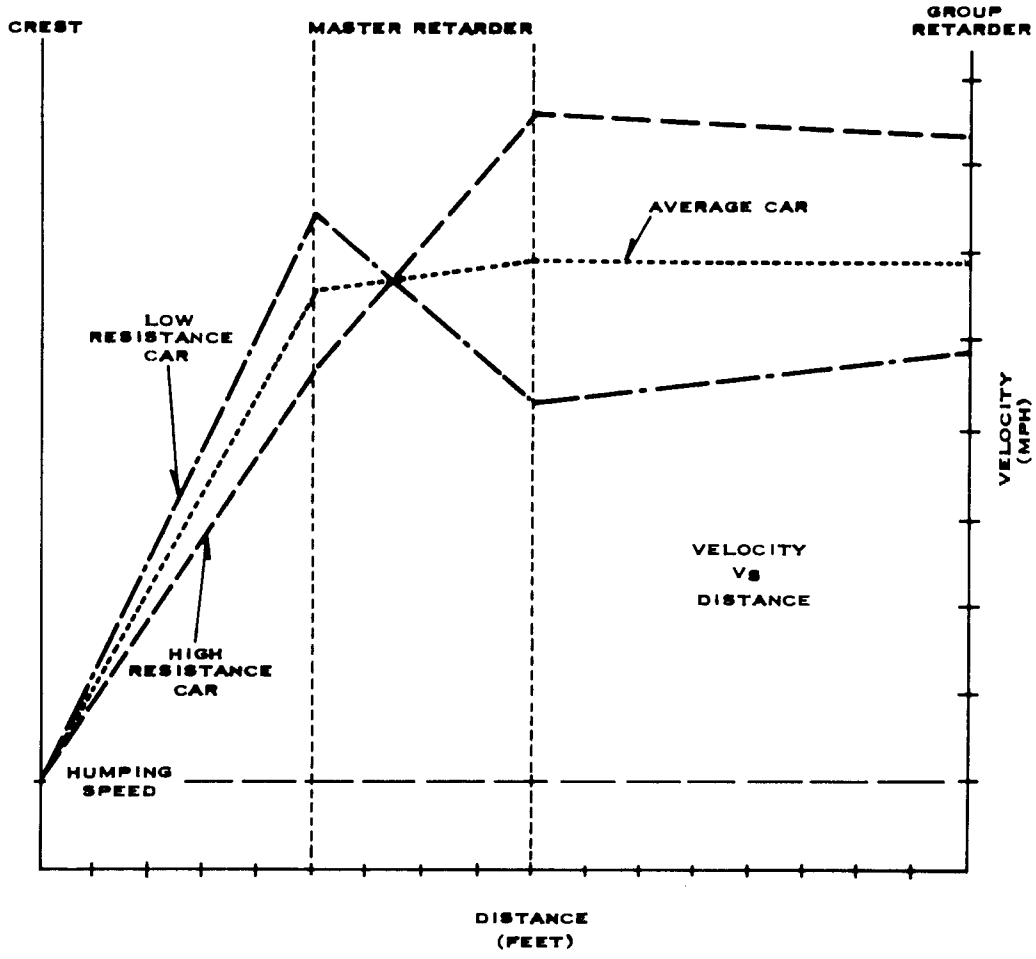

Master retarder control of exit speeds using the "Magic X" principle. Travel time of cars between the crest and the entering end of the group retarder will be nearly equal using this principle.

TYPE VR-I, VR-IA AUTOMATIC CLASSIFICATION SYSTEM

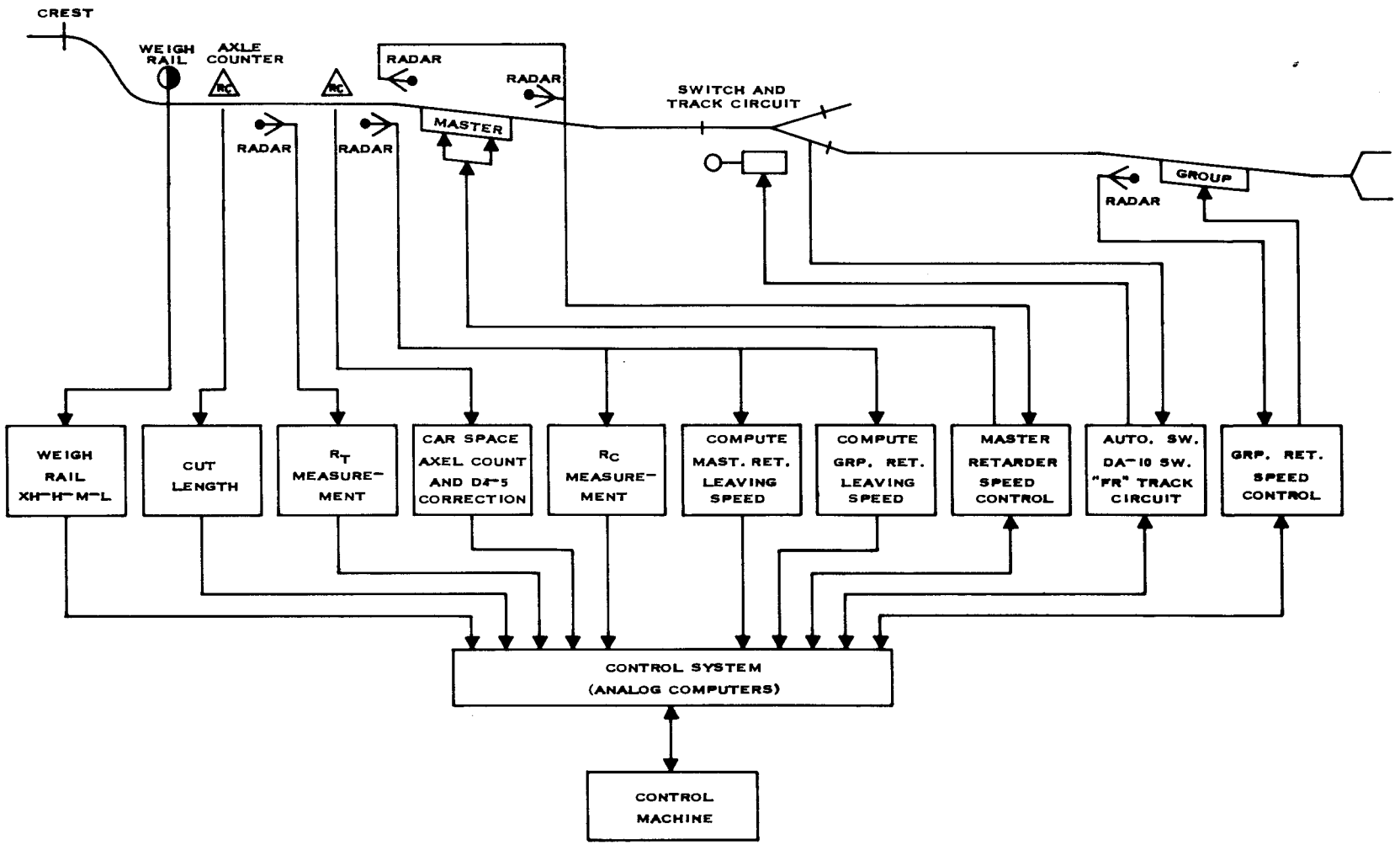

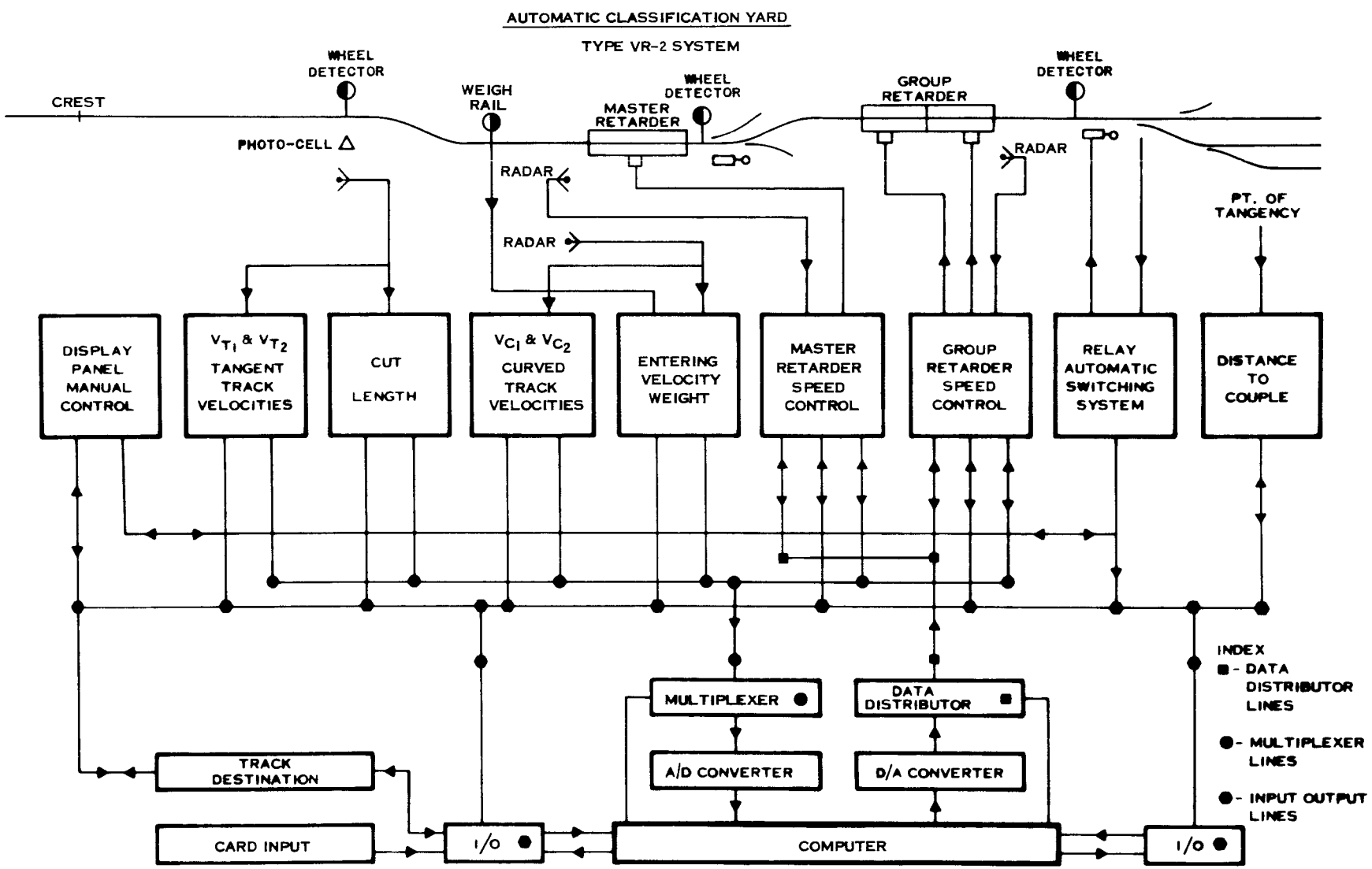
AUTOMATIC CLASSIFICATION YARD
TYPE VR-2 SYSTEM
CREST
WHEEL DETECTOR
WEIGH RAIL
WHEEL DETECTOR
MASTER RETARDER
GROUP RETARDER
WHEEL DETECTOR
PHOTO-CELL
RADAR
RADAR
RADAR
PT. OF TANGENCY
DISPLAY PANEL MANUAL CONTROL
V_{T_1} & V_{T_2} TANGENT TRACK VELOCITIES
CUT LENGTH
V_{C_1} & V_{C_2} CURVED TRACK VELOCITIES
ENTERING VELOCITY WEIGHT
MASTER RETARDER SPEED CONTROL
GROUP RETARDER SPEED CONTROL
RELAY AUTOMATIC SWITCHING SYSTEM
DISTANCE TO COUPLE
MULTIPLEXER
DATA DISTRIBUTOR
A/D CONVERTER
D/A CONVERTER
TRACK DESTINATION
CARD INPUT
I/O
COMPUTER
I/O
INDEX
■ - DATA DISTRIBUTOR LINES
● - MULTIPLEXER LINES
● - INPUT OUTPUT LINES

AUTOMATIC CLASSIFICATION SYSTEM

TYPE VR-2A SYSTEM *

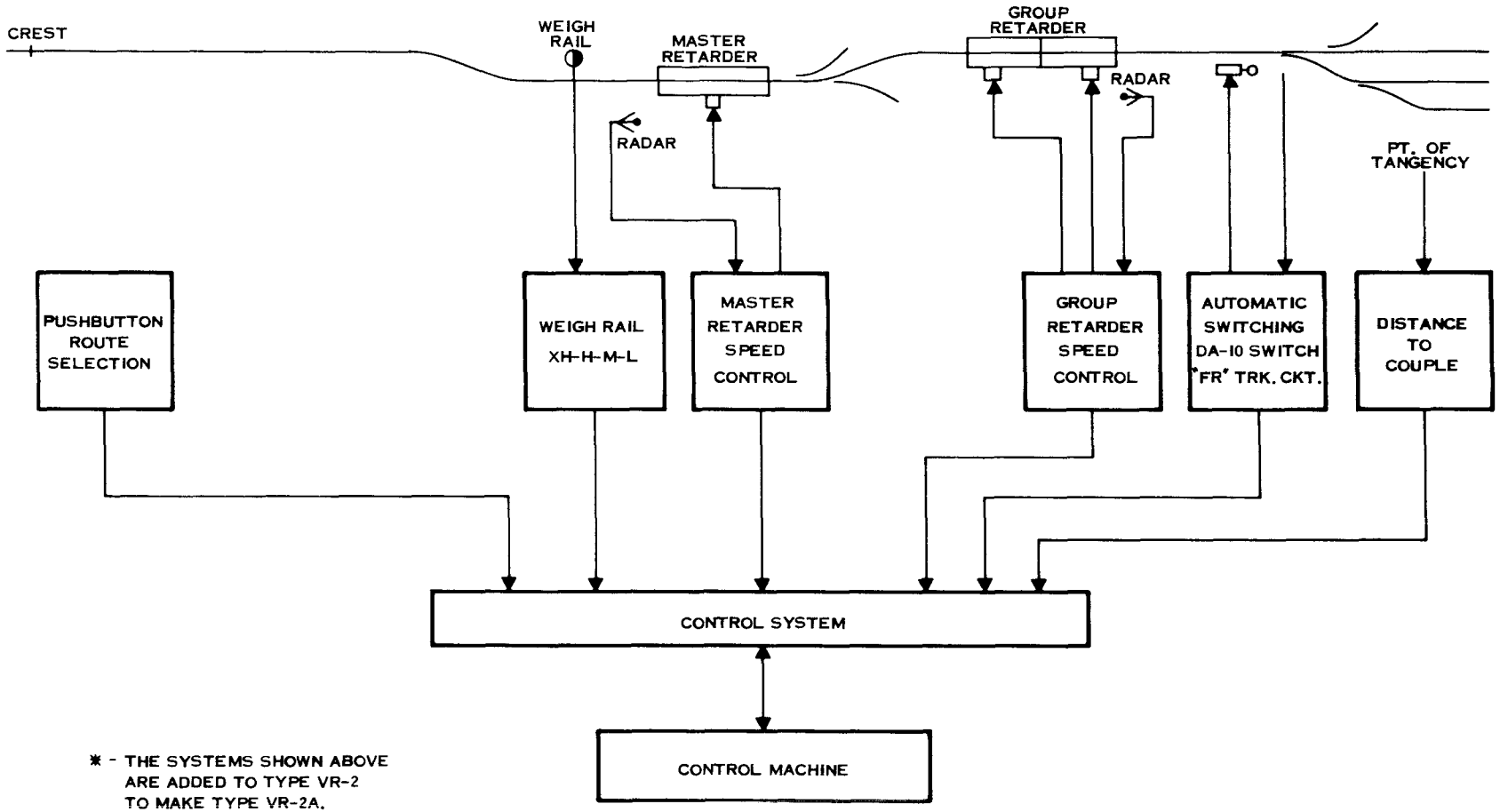

* - THE SYSTEMS SHOWN ABOVE ARE ADDED TO TYPE VR-2 TO MAKE TYPE VR-2A.

AUTOMATIC CLASSIFICATION YARD

TYPE VR-2A
INTER-OFFICE RELATIONSHIP

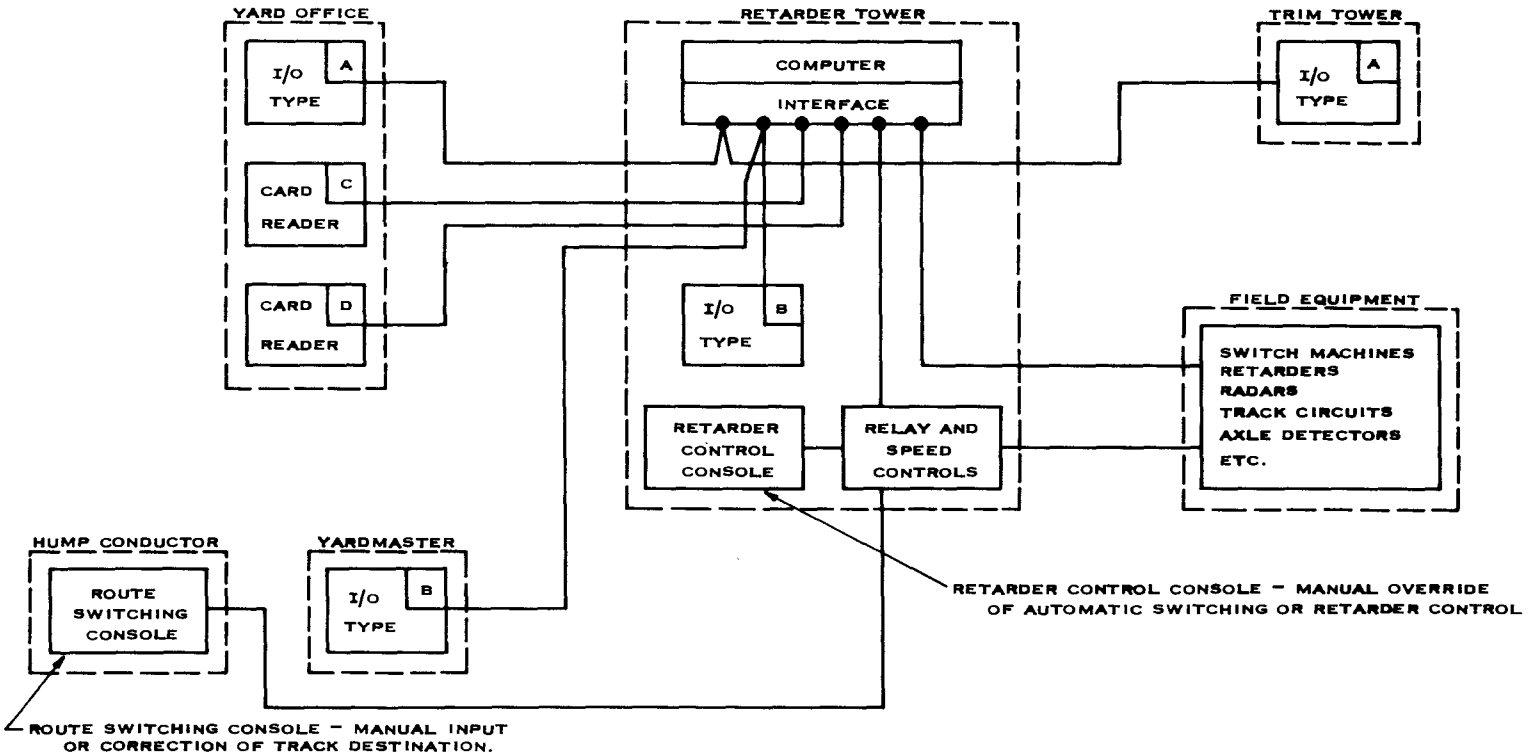

FUNCTIONS

A – TRACK LOGGING BY TRACK, WHEN REQUESTED
CORRECTIONS

B – SYSTEM STATISTICS, WHEN REQUESTED
TRACK CAR COUNT, WHEN REQUESTED
MAINTENANCE REPORTS
MISROUTE REPORTS
CORRECTIONS

C – CUT LIST INPUT

D – TRACK LOGGING BY TRACK, WHEN REQUESTED

WABCO

Standard VR-2 System Features

I. Equipment Status Reports

(a) Switch failing to complete its throw - including switch number.

(b) Automatic retarder control errors greater than ±0.5 M.P.H.

(c) Manual retarder operation during automatic humping resulting in speed error - including retarder number.

(d) Manual switch operation during automatic humping resulting in misroute - other than catchup.

(e) Certain Electronic Equipment failures.

II. Yard System Statistics Reports

(a) "Track full" based on distance to go.

(b) Cuts exceeding 120 ft.

(c) Number of trains classified.

(d) Number of cars classified.

(e) The amount of time the hump was utilized (based on hump slow signal and HAT track circuit occupancy.)

(f) The amount of time required for trimming operations (based on clear trim signal)

(g) Elapsed time on reports, items c through f.

III. Long Car Protection

(a) Car presence information furnished to computer will provide long car protection during humping operation.

WABCO

Additional VR-2 System Features

(Available with slight increase in system price)

IV. Car Catchup and Misroute Report

1. Report misrouted cars, by line number (by car initial and number if desired) - including time and switch number.

   This is done with count-in, count-out logic - (wheel detectors)

V. Anti-Cornering

1. Prevention of cornering based on speed measurements of closely following cars.

VI. Track Status Report

1. Individual track logging including car initial and number (On Demand).

2. Changing of the consist of a body track by trimming moves introduced into the computer via a typewriter input.

3. Number of cars on track including total gross weight.

AUTOMATIC

(WEIGHT PROPORTIONAL RETARDER)

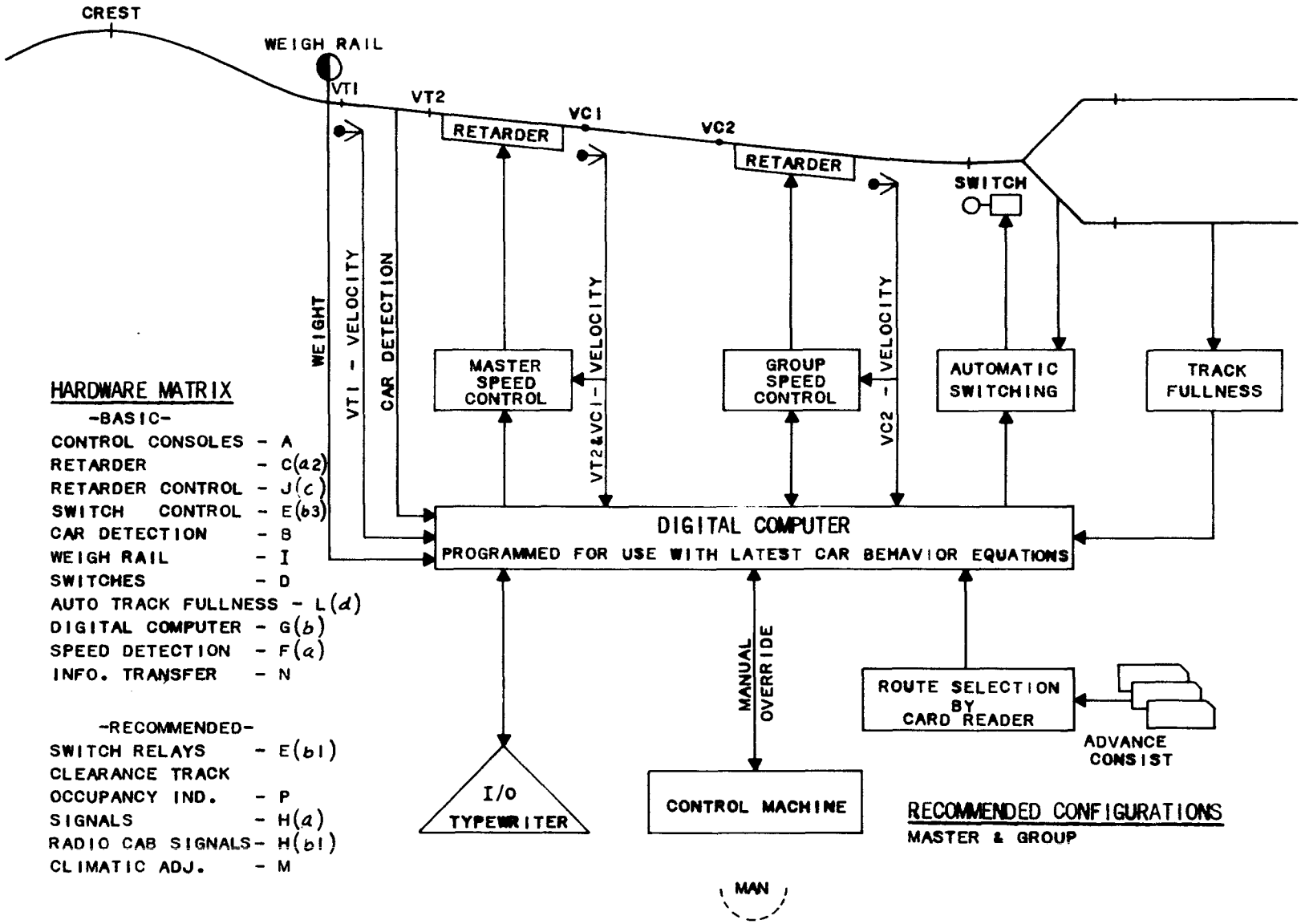

HARDWARE MATRIX

-BASIC-

CONTROL CONSOLES - A
RETARDER - C(a2)
RETARDER CONTROL - J(c)
SWITCH CONTROL - E(b3)
CAR DETECTION - B
WEIGH RAIL - I
SWITCHES - D
AUTO TRACK FULLNESS - L(d)
DIGITAL COMPUTER - G(b)
SPEED DETECTION - F(a)
INFO. TRANSFER - N

-RECOMMENDED-

SWITCH RELAYS - E(b1)
CLEARANCE TRACK OCCUPANCY IND. - P
SIGNALS - H(a)
RADIO CAB SIGNALS - H(b1)
CLIMATIC ADJ. - M

RECOMMENDED CONFIGURATIONS

MASTER & GROUP

FIG VIII a

AUTOMATIC
(AIR RETARDER)

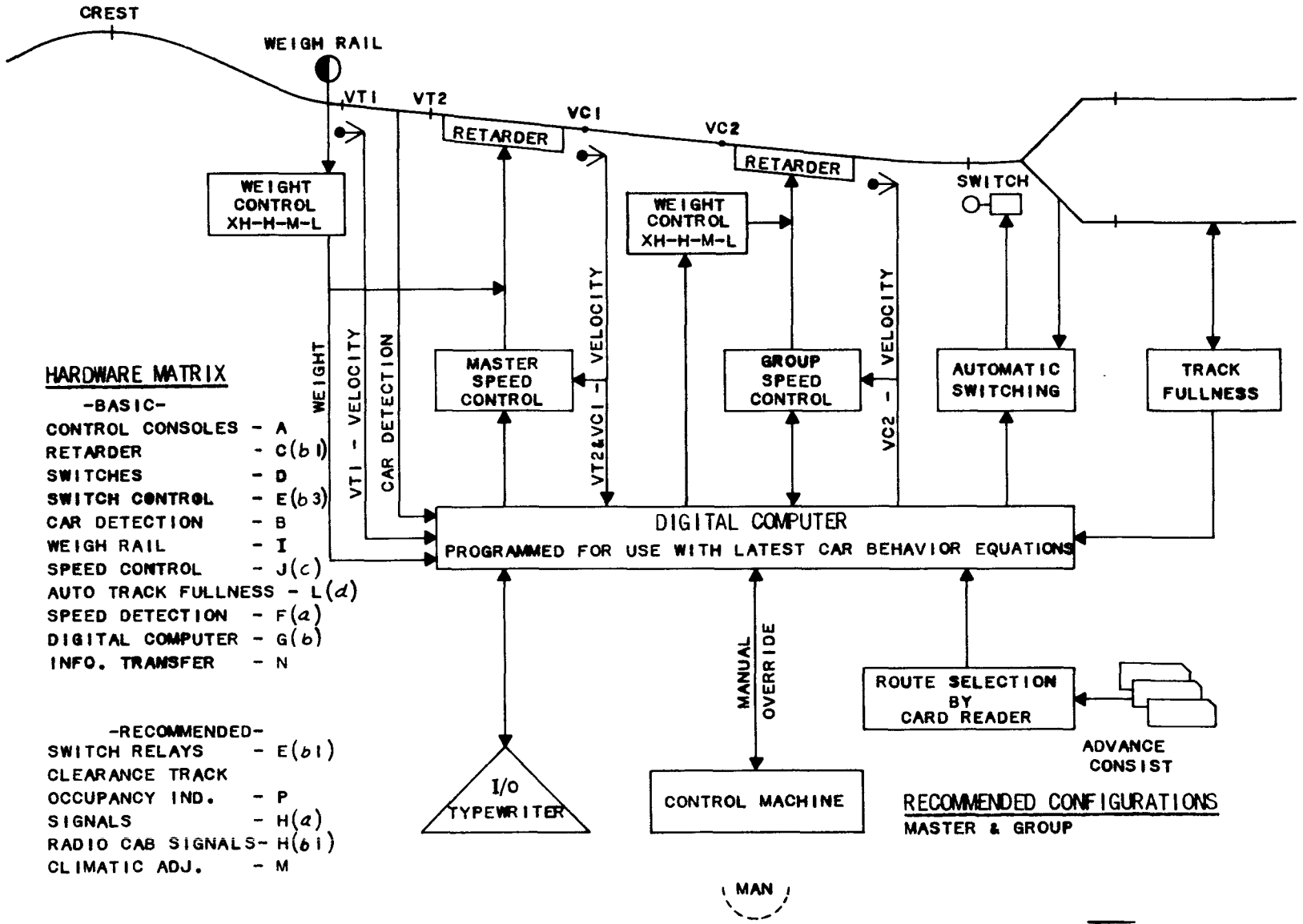

HARDWARE MATRIX

-BASIC-

CONTROL CONSOLES - A
RETARDER - C(b1)
SWITCHES - D
SWITCH CONTROL - E(b3)
CAR DETECTION - B
WEIGH RAIL - I
SPEED CONTROL - J(c)
AUTO TRACK FULLNESS - L(d)
SPEED DETECTION - F(a)
DIGITAL COMPUTER - G(b)
INFO. TRANSFER - N

-RECOMMENDED-

SWITCH RELAYS - E(b1)
CLEARANCE TRACK OCCUPANCY IND. - P
SIGNALS - H(a)
RADIO CAB SIGNALS - H(b1)
CLIMATIC ADJ. - M

RECOMMENDED CONFIGURATIONS

MASTER & GROUP

FIG VIII b

WABCO

VR-2 CLASSIFICATION YARD SYSTEM

FOUNDATION FOR TOTAL TERMINAL CONTROL

— By —

CRAWFORD E. STAPLES

Senior Consulting Engineer

Union Switch & Signal Division

Westinghouse Air Brake Company

WABCO

Introduction

Gentlemen, we appreciate this opportunity to appear before the Committee on Data Systems Equipment to discuss a concept for greatly improving freight car utilization, resulting in increased operating efficiency and substantial cost savings.

Over the years, most of our contacts have been with signal, communication, and operating personnel, since we have specialized in controlling trains and cars - faster and safer, but modern railroad technology is so involved with data systems that we are intensely interested in designing equipment so that it can be integrated with data systems for more effective management control.

Previous meetings of the Data Systems Division have shown recognition of the problem areas and a desire to work with other divisions to improve operations. One of those problem areas most stressed is that of car utilization.

I am sure that you have considered the activity -- or inactivity -- of the average serviceable freight car. Let us briefly review this major problem.

For every 24 hours the average loaded car is in a train, producing revenue ton-miles, it travels empty another 20 hours, resides in customer's sidings another 3 days, and rests in yards and interchange for 15 days! How much of this lost motion is due to inaccurate data, too little, too late?

Suppose we could reduce the car days per revenue load by only one day -- 5%.

That would free 75,000 cars on Class I railroads, which on the same ratio could haul another 100,000,000 ton-miles per day. As an alternative, the railroads could scrap over 75,000 of the oldest cars and rip up 750 miles of storage track equivalent to several hundred small yards, saving over $50,000,000 per year interest and depreciation.

Suppose we could improve this car utilization yardstick by several days, or even more!

We believe we can.

One major railroad expects 35% improvement in car utilization through the use of modern Total Management Systems, linking Total Terminal Control (TTC) and Centralized Traffic Control with Total Operations Control through Total Communications Control.

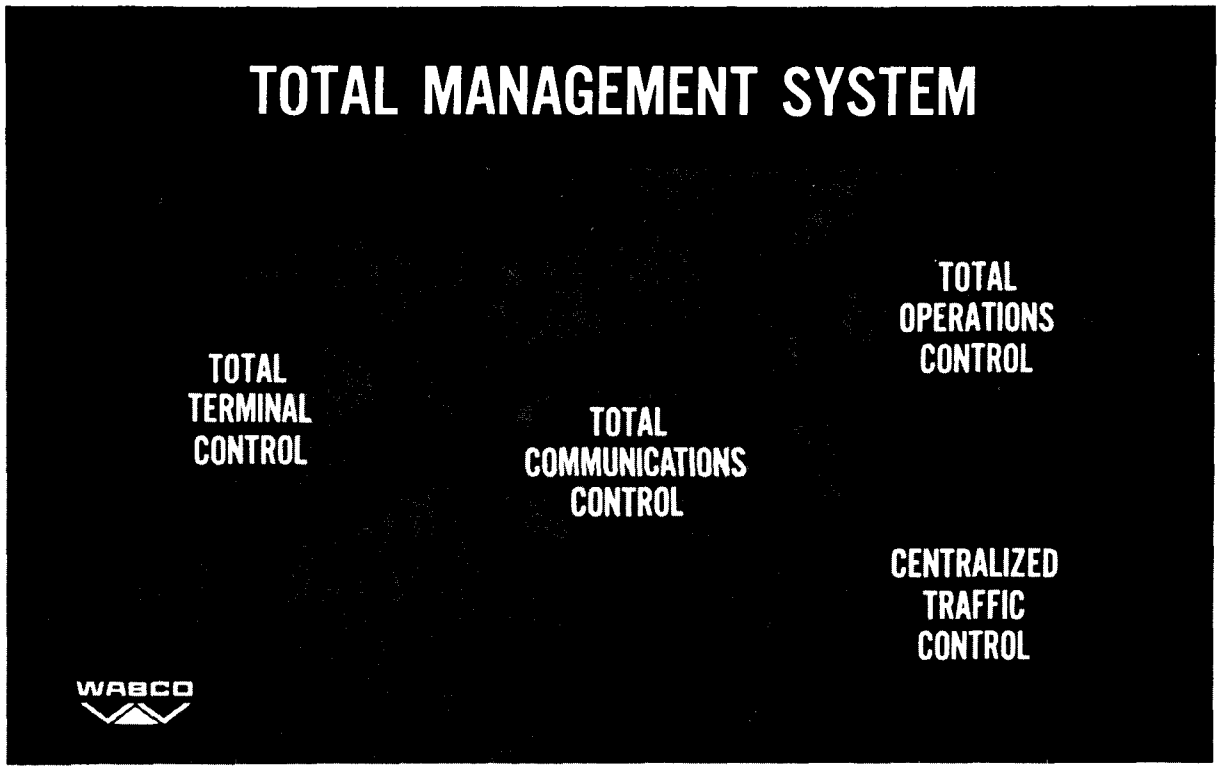

Since this paper concerns itself with terminal operations, and so that we have a common understanding of the subject, I would like to briefly define Total Terminal Control.

TTC is an integrated management system for controlling the movement and servicing of cars within a terminal, for maintaining the inventory of car location, for providing timely data for management by exception, and for facilitating associated paper work.

Today, I would like to discuss with you what is now being done with the digital computer in WABCO's VR-2 Classification Yard System, and what can be done to improve terminal operations to provide major benefits in four specific areas:

- **IMPROVED CUSTOMER SERVICE**
  - **Faster Throughput**
  - **Damage-free Shipment**
- **INCREASED CAPITAL UTILIZATION**
  - **Decreased Terminal Time**
  - **Manpower Savings**
- **ENLARGED MANAGEMENT CONTROL**
  - **Car Inventory, Reports, & Statistics**
  - **Compatibility with Total Management**
- **EXPANDIBILITY**
  - **Automatic Routing**
  - **Work Load Forecast**

In addition, this modern integrated system concept enables the railroad to precisely predict car arrival, manage and closely control traffic, prevent unexpected delays, and accurately report car locations.

Savings can also be realized in the speed-up of paper work, and in the savings in cars and track and labor. And this modern computer-controlled system is so developed that it can easily accept any future changes and expansion.

Although the digital computer is a powerful tool that will make TTC economically feasible, it is only one piece of hardware required along with many other proven input and output devices.

Just as we built the hardware and systems capability for handling CTC installations of all sizes up to complicated, digital computer controlled,

interlocking consolidations on a complete railroad, we have been building the hardware and systems capability to implement TTC.

We believe that Total Terminal Control will do for terminals what Centralized Traffic Control has done for main line train movements. In fact, we believe that TTC is, potentially, the most profitable concept for railroads since dieselization.

TOTAL TERMINAL CONTROL

$$\frac{\text{TTC}}{\text{TERMINALS}} = \frac{\text{CTC}}{\text{MAIN LINE}}$$

Operation by signal indication (CTC), communications, dieselization or electrification, and modern rolling stock have sped up over-the-road train movements in the last 30 years. Major classification yards have improved terminal operations within their areas. Yet the average daily car mileage has remained almost constant. How can we improve car utilization?

WABCO

TOTAL TERMINAL CONTROL

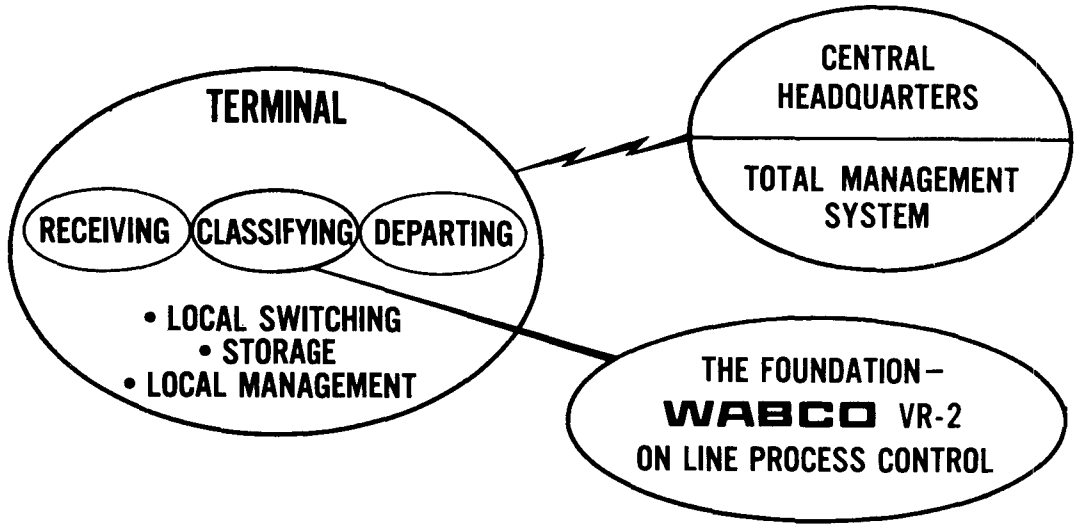

We are convinced that the solution is to provide TTC linked by communications with Central headquarters for achieving a Total Management System. In this concept, local terminal management has the responsibility for terminal operations and maintaining car inventory within the terminal, which may include a combination of receiving, classifying and departing yards, or a combination of several yards within an area. Central headquarters has the responsibility for system-wide operations and car inventory by terminals or divisions.

TTC will provide the means--for improving receiving and departure yard as well as classification yard operations--for facilitating local switching movements and storage-- and for providing local terminal management with pertinent information for exercising management and process controls.

With equipment now available, management need not exist in a vacuum nor on a diet of stale information. The speed of computers and communications provides data on a real-time basis.

The foundation for Total Terminal Control is the VR-2 Classification Yard System, now being installed at Southern Pacific's Eugene, Oregon, Yard and Norfolk and Western's Bellevue, Ohio, Yard.

To develop VR-2 to meet the needs of these installations, we organized a task force of systems, project, computer, and research engineers experienced in railroad operations. To establish the operating rules and procedures, we worked with teams of railroad officials with experience in data systems, signaling, communications, operations, engineering and personnel relations.

The VR-2 Classification Yard System employs an on-line, real-time process control, stored program digital computer. Punched card-oriented for car data Input/Output the system uses I/O typewriters for input commands and output messages.

Automatic switching and speed control, and visual and audible displays on the control consoles, are under program control, but the automatic controls can be manually overridden by the retarder console operator.

Inventory of car location is available on punched cards or hard copy by means of typewriter output. Various operational reports, alarm messages, and system statistics are typed.

On each of these two installations, we are furnishing a Computer Control Company DDP-116 main frame, a Burroughs card reader and punch, and 4 Teletype I/O typewriters. The computer has 12K 16-bit words of high speed core memory and 128K words of bulk storage accessed from a peripheral magnetic drum system. The drum word is comprised of 16 data bits plus a parity bit and a guard bit.

In order to minimize noise, the computer is interfaced with field equipment through a combination solid-state and relay interface; shielded, twisted pairs are used for I/O circuits between the solid-state and relay interfaces. The Analog/Digital and Digital/Analog converters associated with automatic speed control, and wheel detector output devices are located in the interface. Other pieces of field equipment, such as switch machines, track circuits, retarders, signals, indicators, and control consoles, are interfaced

through relay contacts.

The solid-state interface is designed to operate at the same speed as the main frame, using similar printed circuit boards, so that the interface always appears ready to the computer for input and output of digital information. The A/D converter is multiplexed to save equipment; while the conversion requires about 150 microseconds, priority interrupt logic guarantees that the main frame is not tied up during that time.

The VR-2 System is adaptable to any yard arrangement. Since the two yards now being installed are similar in general pattern, but considerably different in detail, I will discuss the features of the VR-2 System on a typical basis, rather than concentrating on one yard.

- -

Let us look at the inter-office relationships in a typical VR-2 classification yard.

INTER-OFFICE RELATIONSHIPS

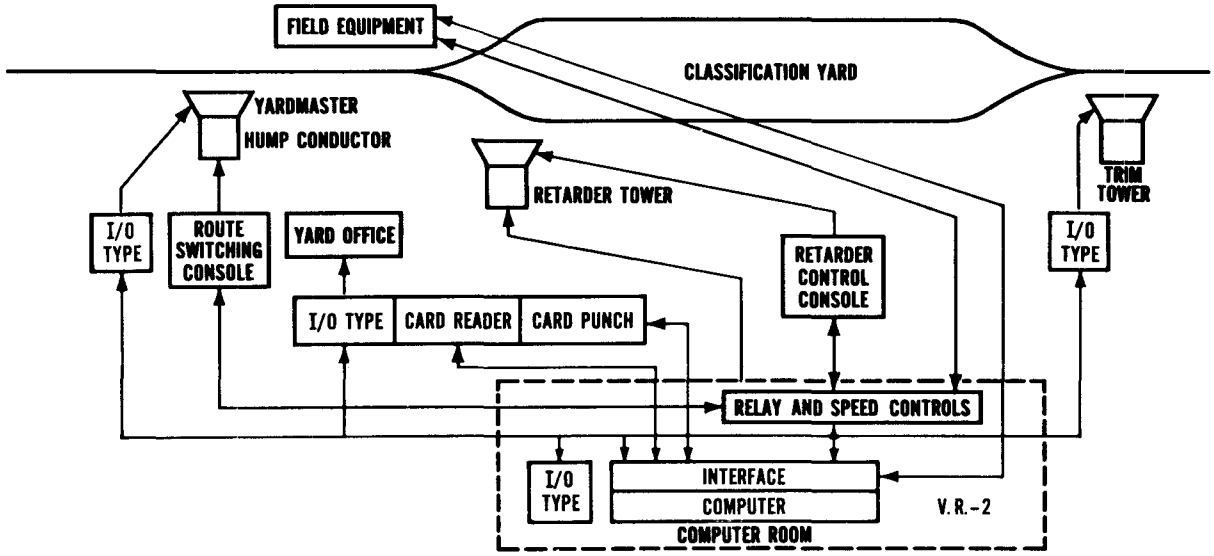

The yard office is the focal point for a punched card-oriented digital computer controlled classification yard. That is the location of the communication equipment and office machines which the clerks use to produce and correct advance consist, cut, and outbound consist lists. Pneumatic tubes interconnect the yard office with the yardmaster, hump conductor, and retarder operator. Voice communications are available to these and other points in the yard.

Thus, the card reader and card punch interfaced with the computer are located in the yard office, along with one I/O typewriter. The card reader is used primarily to input car data and bowl track assignments and to correct car data. The card punch is used primarily to output car data for cars on a bowl track, to be used for outbound consists or reclassification. The I/O typewriter is used to input commands and to receive operational reports.

The I/O typewriters at the yardmaster's office and in the computer room are used mainly for receiving operational reports. The I/O typewriter at the trim tower (departure yardmaster's office) at the make-up end of the yard is used primarily for receiving bowl track logging reports, since that yardmaster is responsible for making up departing trains.

Actually, all of the I/O typewriters can be used for input or output and are operated on the same channel. Since they are under computer control, only one can input at a time. However, output messages can be received simultaneously by any desired combination of typewriters.

Since the typewriter speed is 10 characters per second, whereas the card punch delivers 100 cards per minute, it is faster to log tracks on cards, use a line printer to prepare a list, and transmit the list by pneumatic tube. However, since the trim tower may be a mile away, the pneumatic tube is not available, so logging at the trim tower is received by typewriter.

Normally, track assignments will be punched on the input car data cards and the computer will automatically route and control the speed of cars being humped. The track destination for the next 4 (or 5) cars in order at the crest is displayed on the route switching and retarder control consoles. In case the

line check shows that the cut list is in error, the yard clerk can correct the cards before they are read and the track destination displayed, or the hump conductor can make corrections for cars associated with the display by pushing buttons on the route switching console. The retarder operator can follow cars by observing lights on the retarder control console, and can override the automatic controls in emergencies by manipulating the switch and retarder levers on the console.

FUNCTIONAL FLOW CHART

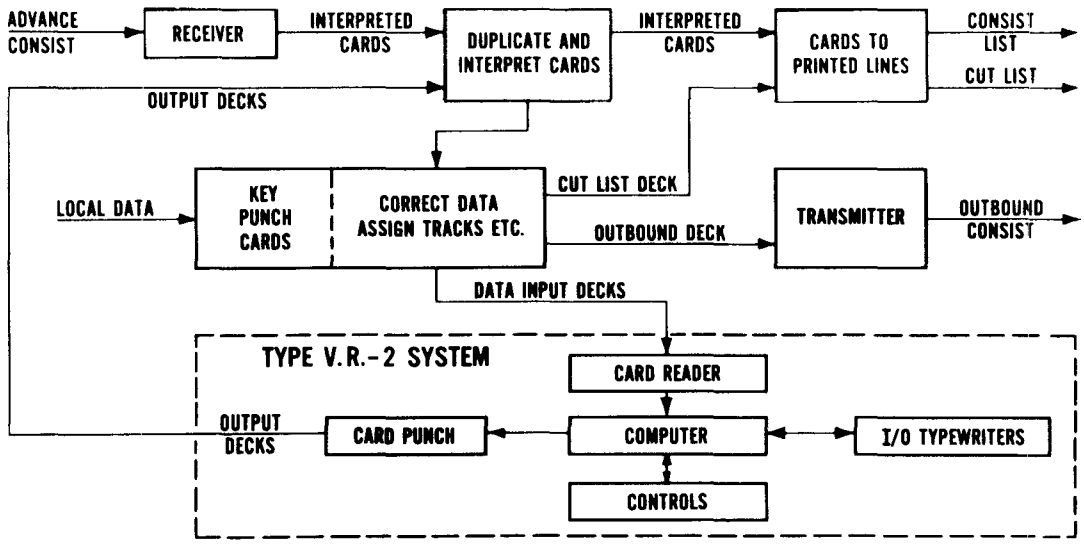

The functional flow chart shows the functions performed by the yard clerks in preparing consist lists, cut lists, and outbound consists.

First, a deck of interpreted cards is obtained for the advance consist of an expected train. This deck may be output directly by a receiver communicating with Central Headquarters or another terminal, or the deck may be made locally from a teletyped punched paper tape. The deck is usually duplicated, and a consist list is printed in a line printer from the duplicate deck. The consist list is distributed to the yardmaster and other personnel.

Either before or after the line check of the arriving train, the yardmaster assigns bowl tracks for the various destinations and decides the order and arrangement of trains to be humped. The yard clerk rearranges the consist decks to form a cut list deck, correcting data as necessary, key-punching local data including track assignment, and key-punching cards for cars not listed on the advance consist. He also attaches suitable header and end cards to the cut list deck and prints a cut list on the line printer from this deck. The cut list is transmitted by pneumatic tube to the yardmaster, hump conductor, and retarder operator.

When the train is ready for humping, the yard clerk inserts the cut list deck in the card reader of the VR-2 System and types a suitable command on the I/O typewriter. The computer takes over, tracking the cars, controlling switches to properly route the cars, controlling the speed in the retarders to assure proper coupling speed in the bowl tracks, and maintaining an inventory of the car data associated with the cars on each bowl track, in order. Any irregularities requiring corrective action are reported on the typewriter.

The yard clerk can also correct data and add or delete car data in the computer memory by a combination of typewriter input commands and a corrected deck of cars, for any block of consecutive cars from one to the full capacity of the bowl track. This facility is also used to update the inventory when placing the computer in service, or when cars are shifted from one track to another during trimming or other non-automatic operations.

When a bowl track is to be pulled to make up a departing train, the yard clerk can type a suitable command to cause the card punch to produce a deck of car data cards, in order, for all of the cars on that bowl track. The clerk combines and rearranges the decks for the appropriate bowl tracks to make up an outbound deck, from which the outbound consist is transmitted to Central Headquarters or another terminal. After the bowl track is pulled, the clerk deletes the associated car data from computer inventory by a suitable typewriter command.

Another feature is automatic reclassification. Sometimes it is not feasible to assign cars to the final destination, and they are humped into a "hold" track. By using a 3-digit number for track assignment, the third digit can be used for a reclassification zone. Then when the "hold" track is to be reclassified, the clerk can obtain an output deck for that track, interpret it, attach a header card with instructions for interpreting the reclassification zone, insert the deck in the card reader, type a suitable command on the typewriter, and delete the car data from inventory.

Here is a typical car data input card used on one of the installations. The output car data card is identical to the input card in columns 1 to 60 and 68 to 70. The remaining columns are reserved for local use and need not be output, and therefore need not be stored in bulk memory. For instance, the W in column 67 indicates to the weighmaster that the car should be weighed.

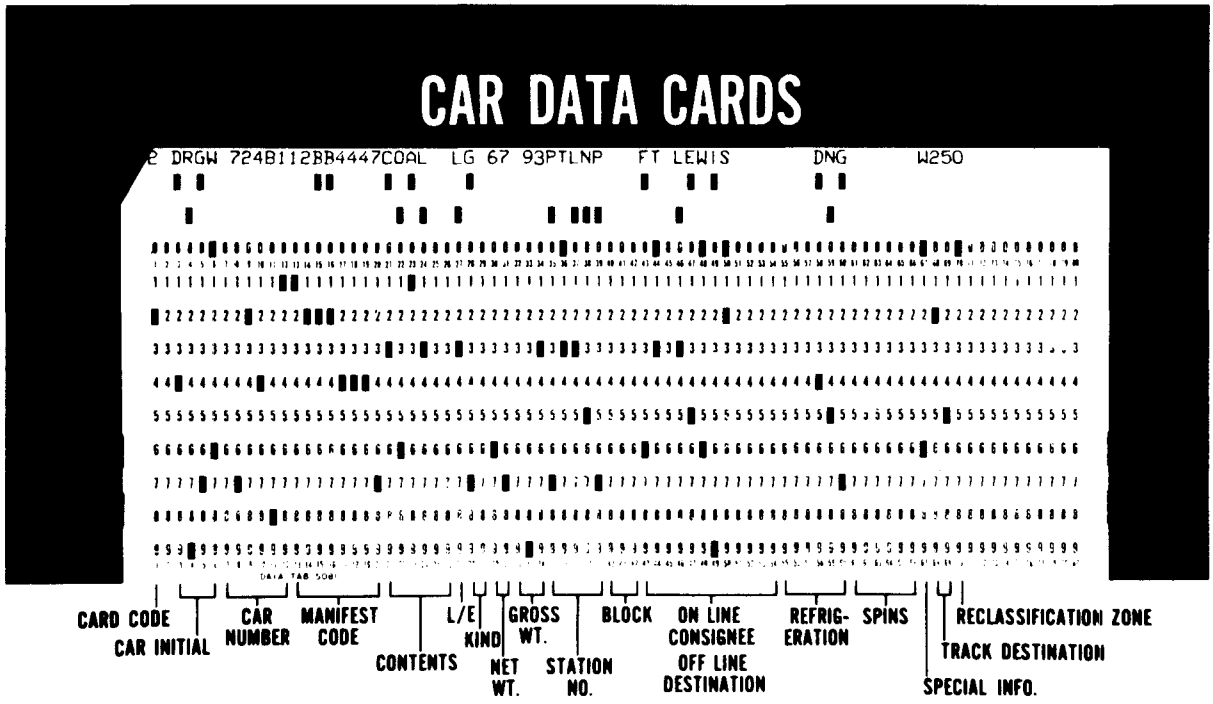

Some of the car data is required for process control. The card code is essential to distinguish between car data cards and other types, although it can be derived from distinctive data. The track destination is used to route the cars and the reclassification zone for reclassification; these 3 original numbers are retained to maintain the destination of cars which may be temporarily diverted, as to the repair track.

Other car data, such as the car initial and number, are output in some operational reports. The total gross weight of all cars on a bowl track is accumulated and listed with the track report.

The format of the car data card is considerably different on the other installation, although most of the information is similar. Also, follow cards are used for piggy-back trailers and special information.

For economy in program and bulk memory capacity, it is desirable to confine the car data to a minimum and to one card per car.

However, the main function of the output cards is to facilitate makeup of outbound consists. Therefore, it is essential to make the format consistent with the data required for transmission to Central Headquarters or to other terminals. To facilitate process control in the classification yard, one card per car should be distinctive.

The specific format of the card makes little difference for individual installations, so far as the computer is concerned, since editing is required; however, there would be an advantage for interchange if formats were the same for all railroads. Interchange is important -- customers look at the railroads as one entity, even though they deal with only the originating or delivering railroad.

It is conceivable that uniform cards could be transmitted not only along one railroad, but from railroad to railroad, and even to and from customers. The standard transportation geographic code and UMLER* are steps toward uniformity.

Track logging may be forward, as shown, or reverse, depending upon the initiating input command, but in either case, the car sequence number refers

* Universal Machine Language Equipment Register.

to the order starting at the departure end of the bowl track. Track logging may be stopped at any point by typewriter input command, when information is needed for only a few cars.

TRACK LOGGING REPORT

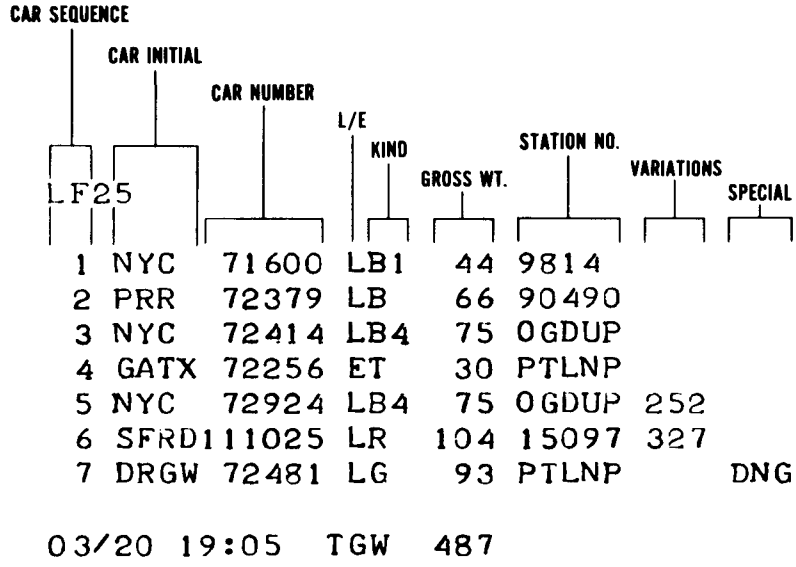

In order to save time, information should be kept to the minimum required by the trim yardmaster. In this typical report, car initial and number, load or empty, kind of car, gross weight, and station number are typed for each car. The track destination and reclassification zone are typed only if different from the track being logged and the zone is not zero. This points out the variations, due to reclassification, reassignment, or misroute. Special information, such as dangerous, is also typed. The report includes date, time, and total gross weight and/or total length, useful in making up trains.

- -

The logging reports, whether output by punched cards or typewriter, are initiated by a typewriter input command. However, the operational reports, being of the exception-type, are automatically output on selected typewriters when conditions arise which may call for action by the yard clerk or maintainer. All reports include the data and time, and the initials and number of the car involved.

If a car arrives at a bowl track not its assigned destination, the misroute report gives the cause if possible, such as manual switch operation or catchup.

Cuts longer than 120 feet generate a long cut report. Such cuts are too long to be rolling freely when measured, so average rollability values are used.

If the retarder leaving speed differs from the calculated speed by more than 0.5 MPH, the speed error report so indicates. Normally, the pneumatic retarders can control leaving speed within 1/4 MPH.

When a bowl track has only 5 car spaces left, as indicated by car space measurement or by inventory, the full track report informs the yard clerk and yardmaster that trimming may be necessary if many more cars are humped before pulling the track, or perhaps the clerk forgot to delete cars from inventory.

Whenever the hump conductor changes the track destination on the cut list, or adds or deletes a car, the destination change report so indicates.

Before the trim signal is cleared, the hump signal must be set to stop for about a minute to allow rolling cars to reach bowl tracks. Cars are not tracked while the trim signal is clear. The trim report indicates what cars are in the switching area or on the track destination display, so the yard clerk can correct the inventory if necessary.

If the car data card does not have a valid track destination, the display will show a zero destination. If the hump conductor fails to correct the destination, the computer assigns the car to the sluff track and generates the invalid destination report.

The elapsed time from the first to the last car is indicated in the train hump time report.

Alarm messages, such as radar failure, are typed out when necessary. These will be repeated at intervals until acknowledged.

System statistics are automatically typed at the end of each shift. Statistics for the previous shift and for the previous 24 hours include the total cars classified, hump utilization time, and trim time.

These statistics are followed by track reports, listing the number of cars and total gross weight and/or length on each bowl track.

On typewriter command at other times, interim statistics for the shift or individual track reports will be typed.

Generally, typewriter output reports and input commands are terse, to save time. Commands vary from 2 to 10 characters, terminated by a period, acknowledged by carriage return-line feed, or error message.

The various reports and statistics can be changed to suit the needs of any particular yard or railroad. The VR-2 System is quite flexible.

The computer operates in one of 5 modes. In all modes, car inventory can be logged and corrected. Automatic or semi-automatic class depends upon the position of the control lever on the retarder control console. If in automatic class and the trim signal is stop, the automatic route selection mode is used if consist cards are in the card reader and a suitable typewriter command has been input, manual route selection if not; in both modes, the computer program is fully operational. When the trim signal is clear, the trim mode does not follow cars, so corrections in inventory must be made by the clerk. In the semi-automatic class, the monitor mode is used to check the computer and calibrate the yard; the computer performing all functions except controlling switches and car speed, while the standby mode limits computer functions to logging and correction of car inventory.

A simplified macro block diagram shows the principal computer program functions. Since the program cycle is in the order of 0.1 second, most of the

computer program can be on the scan basis. Interrupt is used for functions which must be input or output within a few microseconds or milliseconds.

COMPUTER PROGRAM MACRO BLOCK DIAGRAM

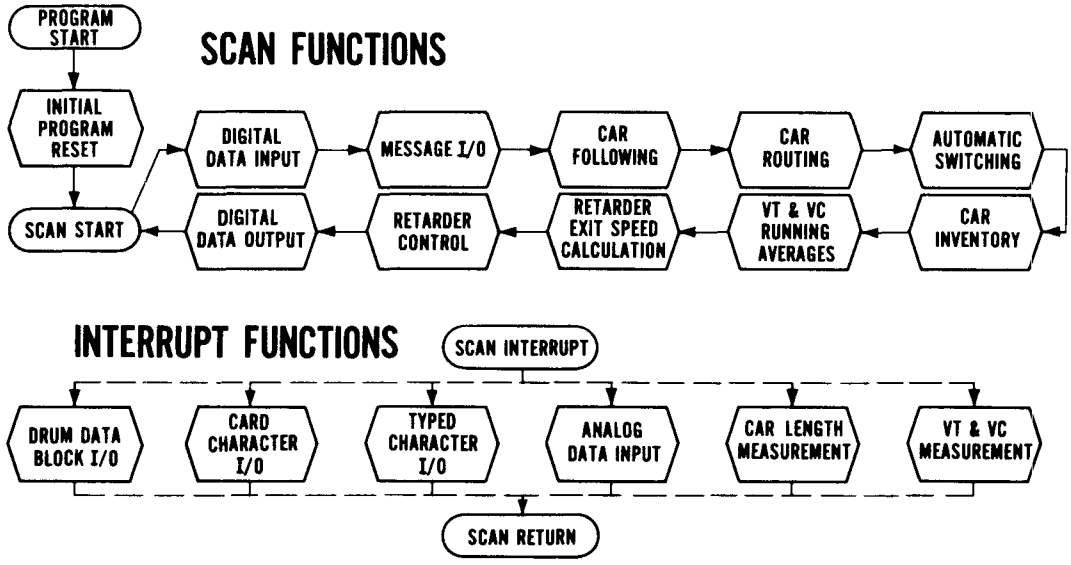

The repeating program cycle starts with digital data input, including status of wheel detectors, switches, track circuits, console levers and push buttons, and other devices. The message I/O involves control of channels for peripheral gear, decoding and encoding messages, and interpreting and editing. Car following, car routing, automatic switching, and car inventory are related functions pertaining to tracking and piloting cars. VT and VC running averages, retarder exit speed calculation, and retarder control pertain to automatic speed control The program cycle ends with digital data outputs, including switch control, retarder leaving speed commands, destination display control, and other commands.

Interrupt functions include drum data block I/O, card and typed character I/O, analog data input, car length measurement inputs, and VT and VC measurements.

While these are the principal functions of the computer program many more routines and sub-routines are required.

AUTOMATIC SWITCHING

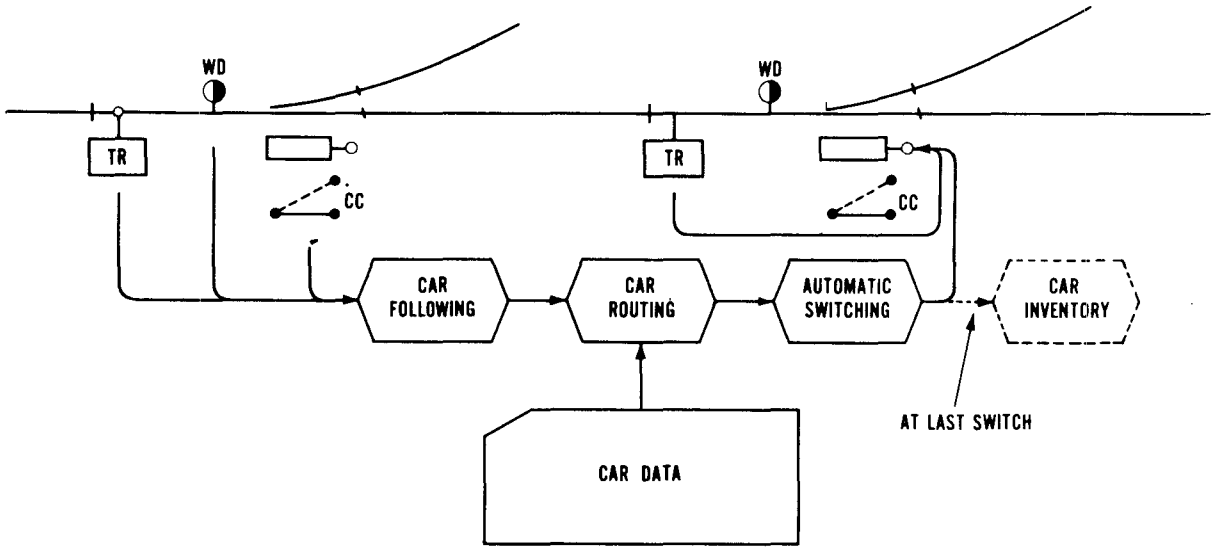

Automatic switching involves several sub-routines. Cars and cuts are identified, along with the number of axles and length, by a combination of a wheel detector, a photo cell, and radar doppler pulses. Car following takes inputs from track circuits, wheel detectors, and switch position. Car routing is determined by car data card or manual input. Automatic switching operates the switch ahead of the car provided the track circuit is vacant. At the last switch, car data is placed in bulk memory car inventory storage.

Since car speed may vary widely below the group retarder, because of variations in rollability and distance-to-go, sometimes a higher speed car will overtake a slower car in the switching area. The computer predicts the likelihood of catchup, and prevents switch throwing when necessary to avoid cornering. If misroute occurs, a report is typed.

AUTOMATIC SPEED CONTROL

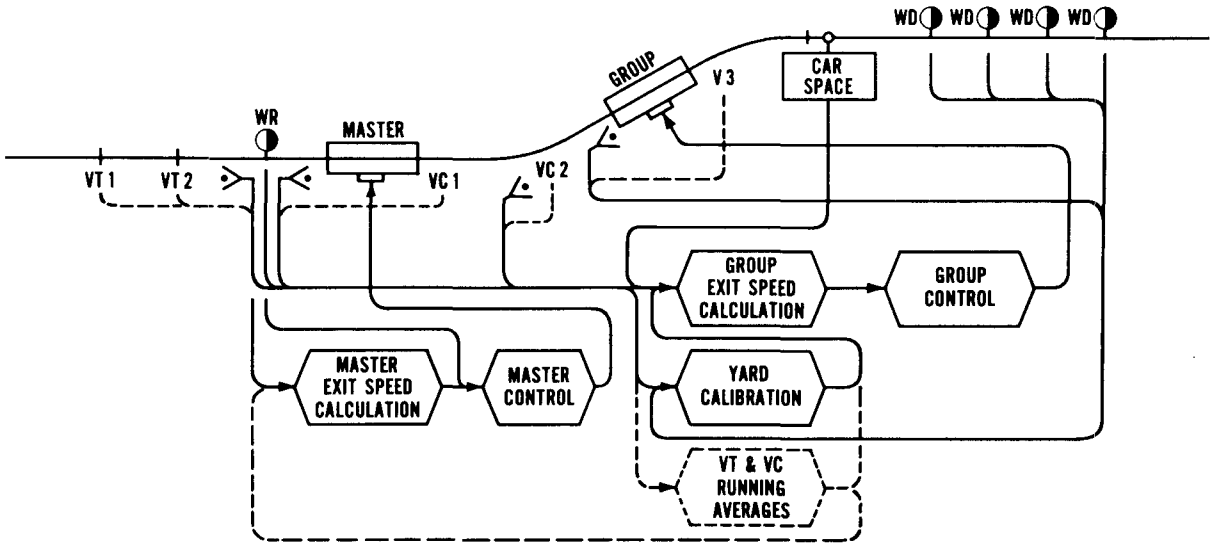

Automatic speed control is more complicated. The master retarder spaces cars time-wise at the groups, providing about the same time interval as at the crest, by slowing down the better rollers, based on tangent track speed measurements and weight. Group retarders control cars to attain proper coupling speeds, based on tangent and curved track speed measurements, weight, car space available and yard calibration.

The two tangent track velocity measurements (VT1 and VT2) determine the car rollability in the tangent bowl track. The two curved track velocity measurements (VC1 and VC2) determine the car rollability in the curved switching area to the point of tangency. For maximum accuracy in calculating the correct group retarder exit speed, these velocity measurements are made on a priority interrupt basis when cars are detected at discrete locations by wheel detectors or track circuits. The weight classification, determined by a weigh rail, is used in the calculation, and also for presetting retarders and limiting pressure to prevent

squeeze-out of light cars. The car space system measures the distance in a bowl track from the point of tangency to the nearest standing car, compensating for intervening rolling cars.

VT and VC running averages are continuously updated and used for long cuts or when valid measurements are not obtained for a car. The yard is calibrated from VT, VC, and actual group retarder exit speed V3 measurements and from wheel detectors located temporarily on bowl tracks.

With the digital computer, more sophisticated speed control techniques can be used and changes can be readily made to use the latest car behavior equations and correlation data.

The VR-2 Classification Yard System is the foundation for Total Terminal Control, not only improving hump operations, but also providing local management with the tools for speeding paper work and maintaining closer control. It improves customer service through faster throughput and damage-free shipment, increases capital utilization through decreased terminal time and manpower savings, enlarges management control through car inventory, reports, and statistics in form compatible with Total Management, and is expandable to provide automatic routing, work load forecast, and other features required for TTC.

Some of these other features, desirable for improving operations and management control, now feasible with digital computers, include roving classification assignments, car diversions, per diem calculations, local and remote inquiry on car location, and correlation of measured with estimated weight.

The program can be further expanded to the entire terminal, including track assignment, scheduling for trains in the receiving and departure yards, and all of the features of the perpetual inventory car location system. The work load forecast leads to peak utilization of empty equipment, locomotives, and cabooses, minimizes the effect of system delays, including initial and final delays, and coordinates divisional activities. The digital computer provides the facility for making simulation studies to improve operations.

To achieve further substantial savings in time and manpower, it is necessary to consider what can be done in the receiving and departure yards, both in speeding train movements and in expediting data handling. Both are connected to the main line and the classification yard.

RECEIVING AND DEPARTURE YARDS

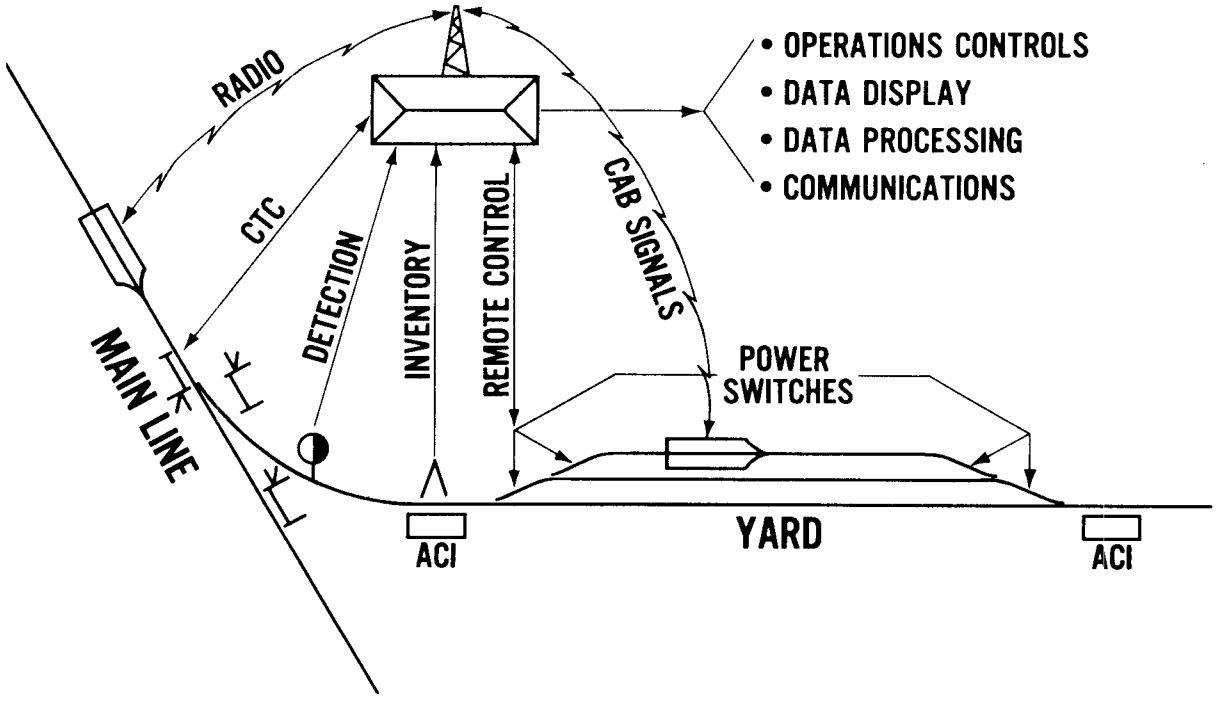

Communications with trains on the main line via radio or CTC forewarns yard management of the arrival time of the inbound work load and availability of clearance for departing trains.

Power switches and operation by signal indication entering the terminal from the main line, within the yard, and returning to the main line, speed up train movements within the terminal area, reduce train delays, and free main line operations. Remote control saves manpower.

Cab signals facilitate yard movements. The application of speed control to hump engines, remotely controlled by the hump conductor, would materially improve the humping operation.

WABCO

Detection of dragging equipment, hot boxes, high and wide loads, and broken flanges at the entrance to the terminal would forewarn local management of defective cars or unusual conditions, saving time and expense.

Communication and data display boards, computer and manually activated, would record pertinent information on outbound train make-up status, power availability and inspection status.

One of the biggest labor-savers would be the application of Automatic Car Identification. One railroad estimated that 4 ACI wayside installations, entering and leaving the terminal and between the yards, would save $180,000 a year in line checking. Integrating ACI with the perpetual car inventory location system, through the digital computer, would optimize data retrieval.

All of these features are based on proven concepts and equipment. Add them together -- with VR-2 and you have Total Terminal Control.

- -

You railroaders and we suppliers must work together to provide what today's transportation customers want:

Available cars
High capacity cars
Fast service
Damage-free shipments
Controlled delivery
Satisfaction and
Savings

To satisfy customers, modern railroads must adopt integrated system concepts which:

Predict car arrival
Manage traffic
Prevent unexpected delays
Report car locations

This requires a Total Management System, comprising Total Operations Control, TTC, and CTC, linked by Communications.

In concluding, let's consider the basic advantages of Total Terminal Control.

It speeds up through-put and paper work.

It saves cars and track and labor.

It provides accurate car location and timely data.

It prepares for future changes and expansion.

The tools for TTC are available now. WABCO would appreciate the opportunity to help you accomplish it.

SEMI-AUTOMATIC CLASSIFICATION SYSTEM

MANUAL CONTROL OF RETARDER
AUTOMATIC CONTROL OF ROUTE

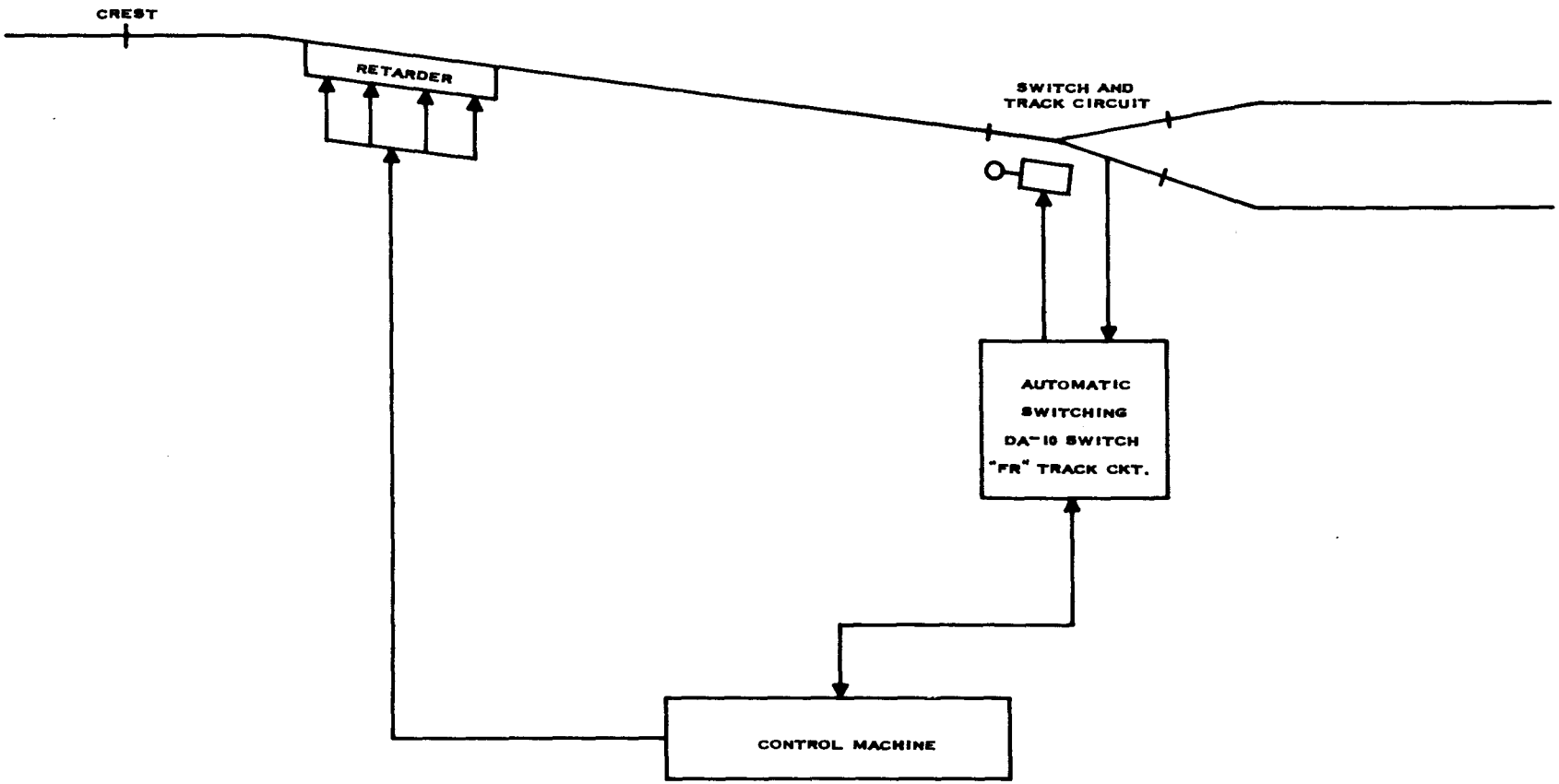

THIS SYSTEM IS FASTER THAN STRAIGHT MANUAL AND IS USUALLY USED IN YARDS HANDLING SAME TYPE MANIFEST AND 400 CARS OR LESS PER DAY.

SEMI-AUTOMATIC CLASSIFICATION SYSTEM

MANUAL PRE-SELECTION OF RETARDER LEAVING SPEED
AUTOMATIC CONTROL OF ROUTE

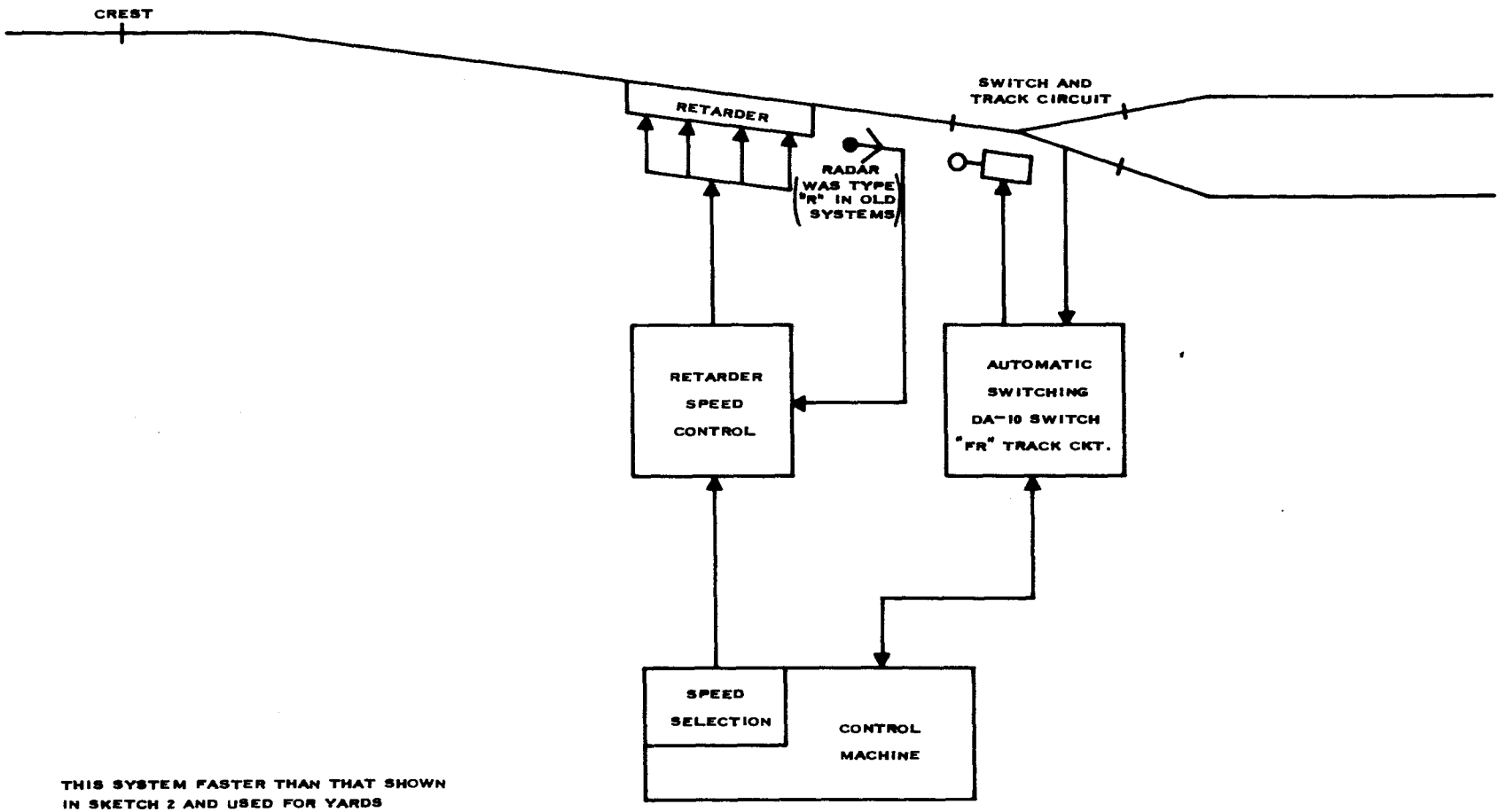

THIS SYSTEM FASTER THAN THAT SHOWN IN SKETCH 2 AND USED FOR YARDS HANDLING 400 TO 1600 CARS DAILY.

SEMI-AUTOMATIC CLASSIFICATION SYSTEM

WEIGHT SELECTION OF MASTER RETARDER LEAVING SPEED
AUTOMATIC CONTROL OF ROUTE
MANUAL SELECTION OF GROUP RETARDER LEAVING SPEED

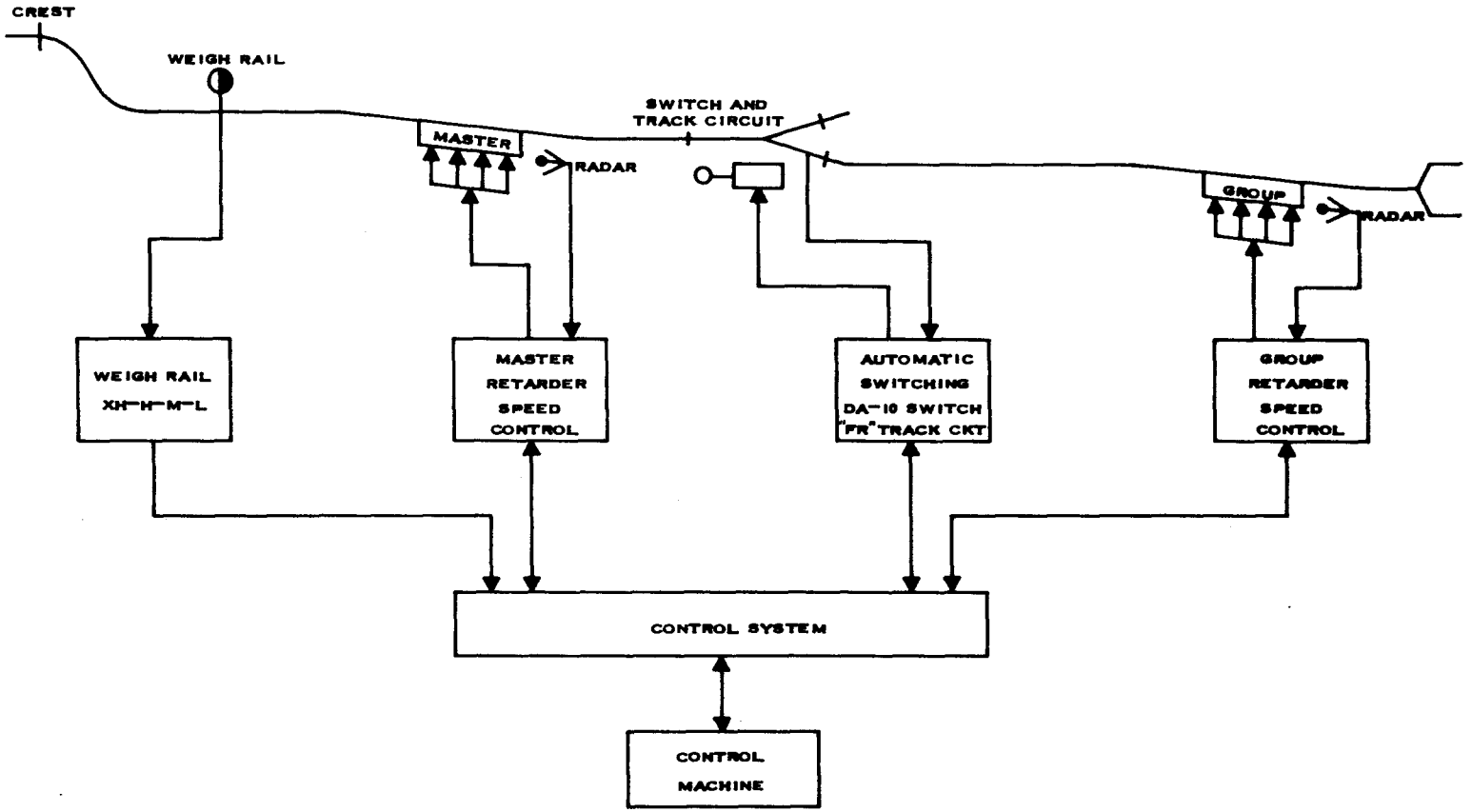

THIS SYSTEM IS A REFINEMENT OVER THAT SHOWN IN SKETCH 3. IT GIVES FASTER HUMPING RATE AND BETTER SPEED CONTROL.

TYPE VR AUTOMATIC CLASSIFICATION SYSTEM

WEIGHT SELECTION OF MASTER RETARDER LEAVING SPEED
AUTOMATIC CONTROL OF ROUTE
COMPUTER CALCULATION OF GROUP RETARDER LEAVING SPEED

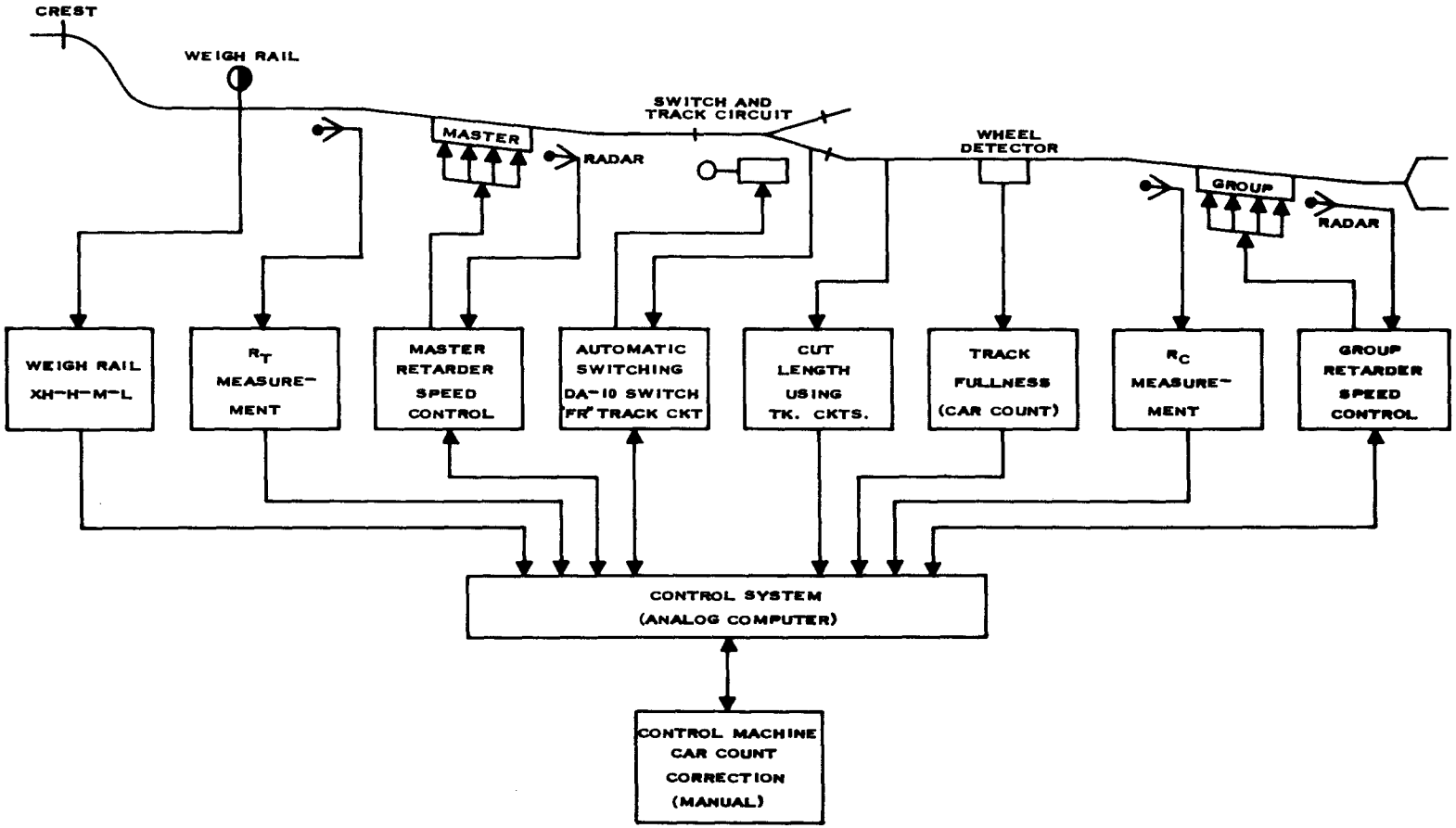

TYPE VR-1, VR-1A AND VR-2 AUTOMATIC CLASSIFICATION SYSTEM

MASTER RETARDER "MAGIC X"

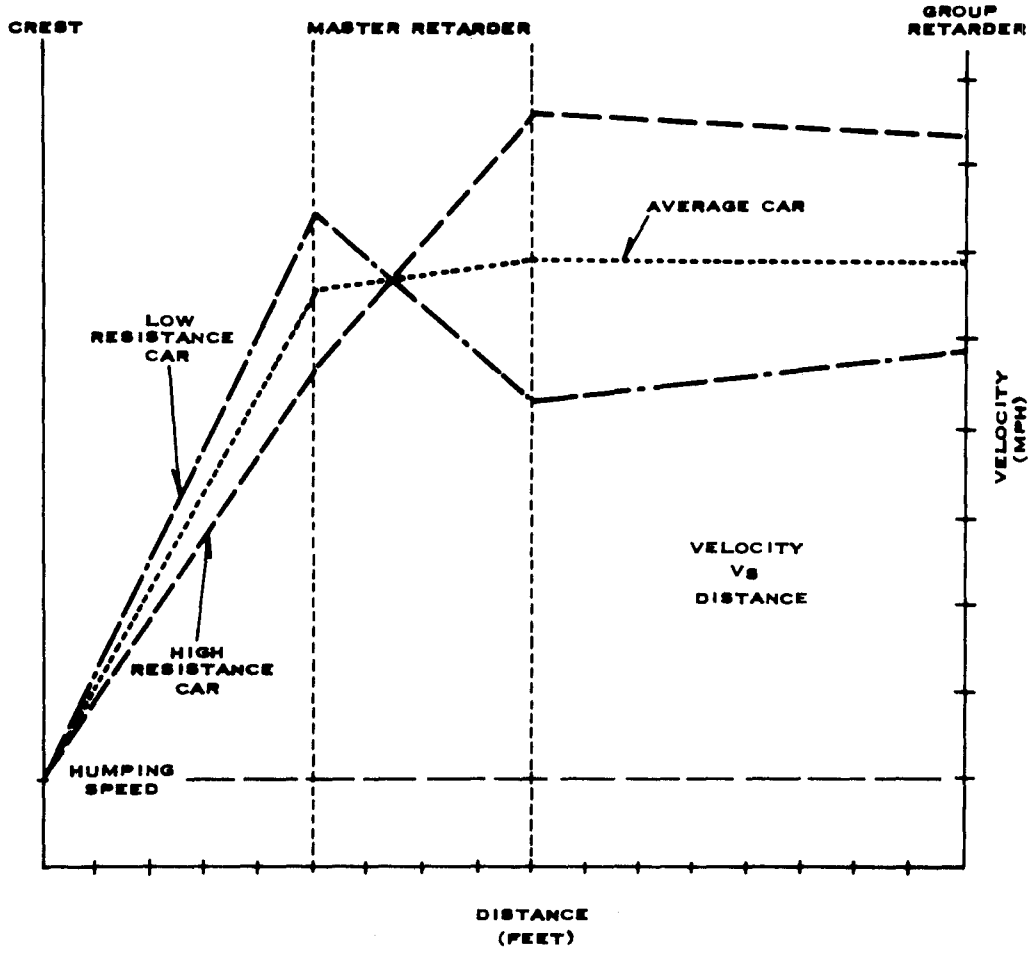

Master retarder control of exit speeds using the "Magic X" principle. Travel time of cars between the crest and the entering end of the group retarder will be nearly equal using this principle.

TYPE VR-I, VR-IA AUTOMATIC CLASSIFICATION SYSTEM

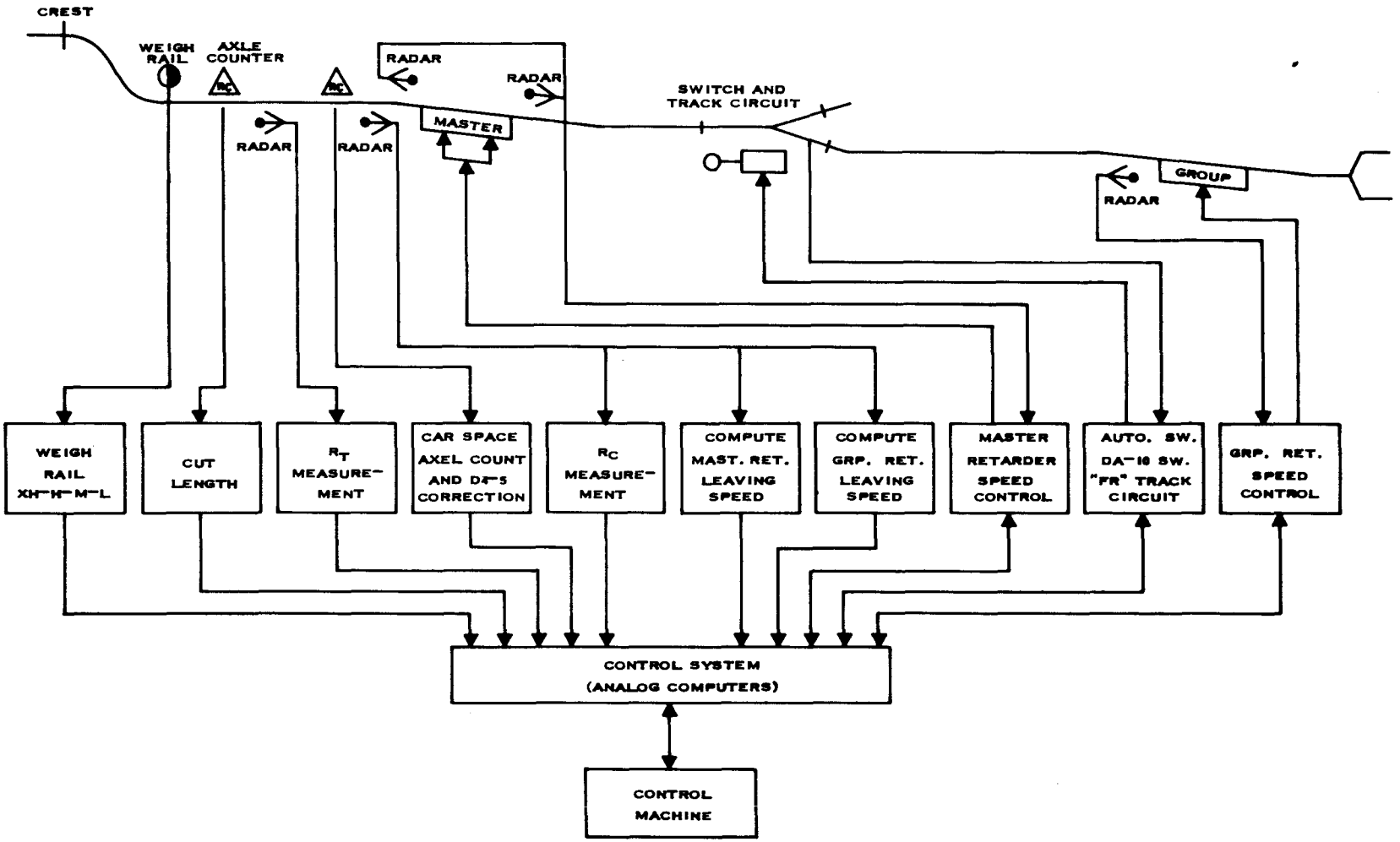

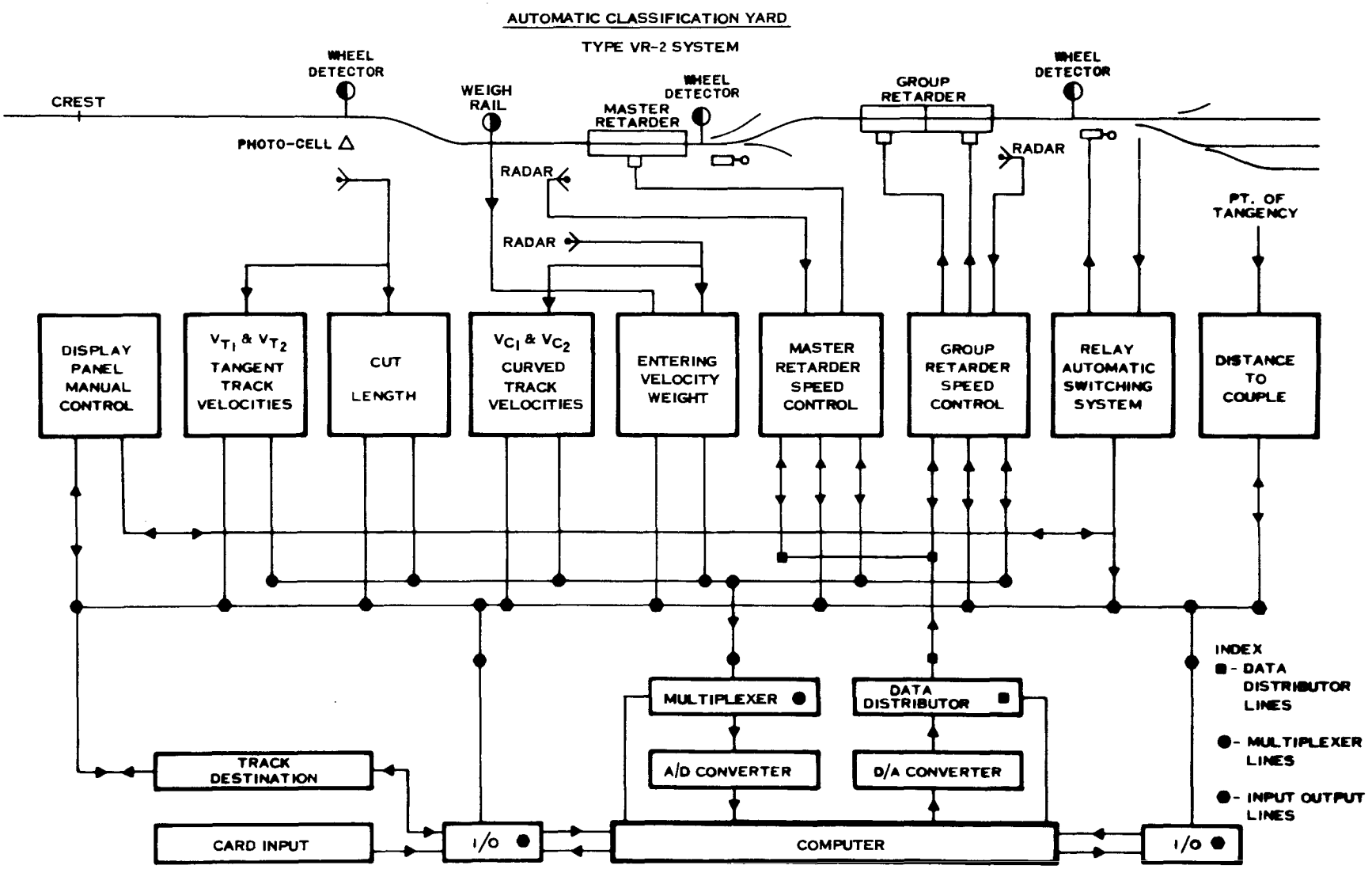
AUTOMATIC CLASSIFICATION YARD
TYPE VR-2 SYSTEM
CREST
WHEEL DETECTOR
WEIGH RAIL
MASTER RETARDER
WHEEL DETECTOR
GROUP RETARDER
WHEEL DETECTOR
PHOTO-CELL
RADAR
RADAR
RADAR
PT. OF TANGENCY
DISPLAY PANEL MANUAL CONTROL
V_{T_1} & V_{T_2} TANGENT TRACK VELOCITIES
CUT LENGTH
V_{C_1} & V_{C_2} CURVED TRACK VELOCITIES
ENTERING VELOCITY WEIGHT
MASTER RETARDER SPEED CONTROL
GROUP RETARDER SPEED CONTROL
RELAY AUTOMATIC SWITCHING SYSTEM
DISTANCE TO COUPLE
INDEX
■ - DATA DISTRIBUTOR LINES
● - MULTIPLEXER LINES
● - INPUT OUTPUT LINES
MULTIPLEXER ●
DATA DISTRIBUTOR ■
A/D CONVERTER
D/A CONVERTER
TRACK DESTINATION
CARD INPUT
I/O ●
COMPUTER
I/O ●

AUTOMATIC CLASSIFICATION SYSTEM

TYPE VR-2A SYSTEM *

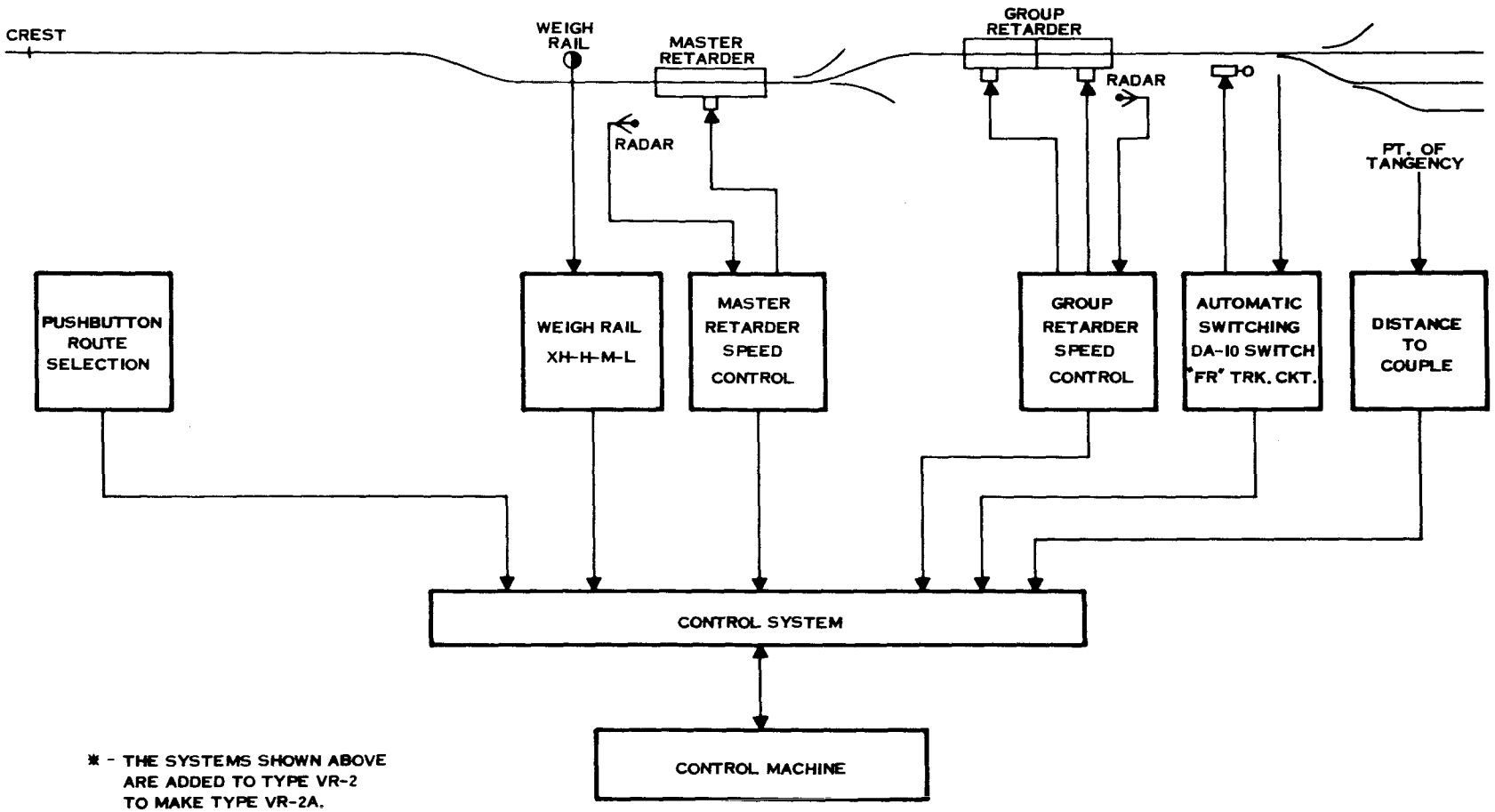

* - THE SYSTEMS SHOWN ABOVE ARE ADDED TO TYPE VR-2 TO MAKE TYPE VR-2A.

AUTOMATIC CLASSIFICATION YARD

TYPE VR-2A
INTER-OFFICE RELATIONSHIP

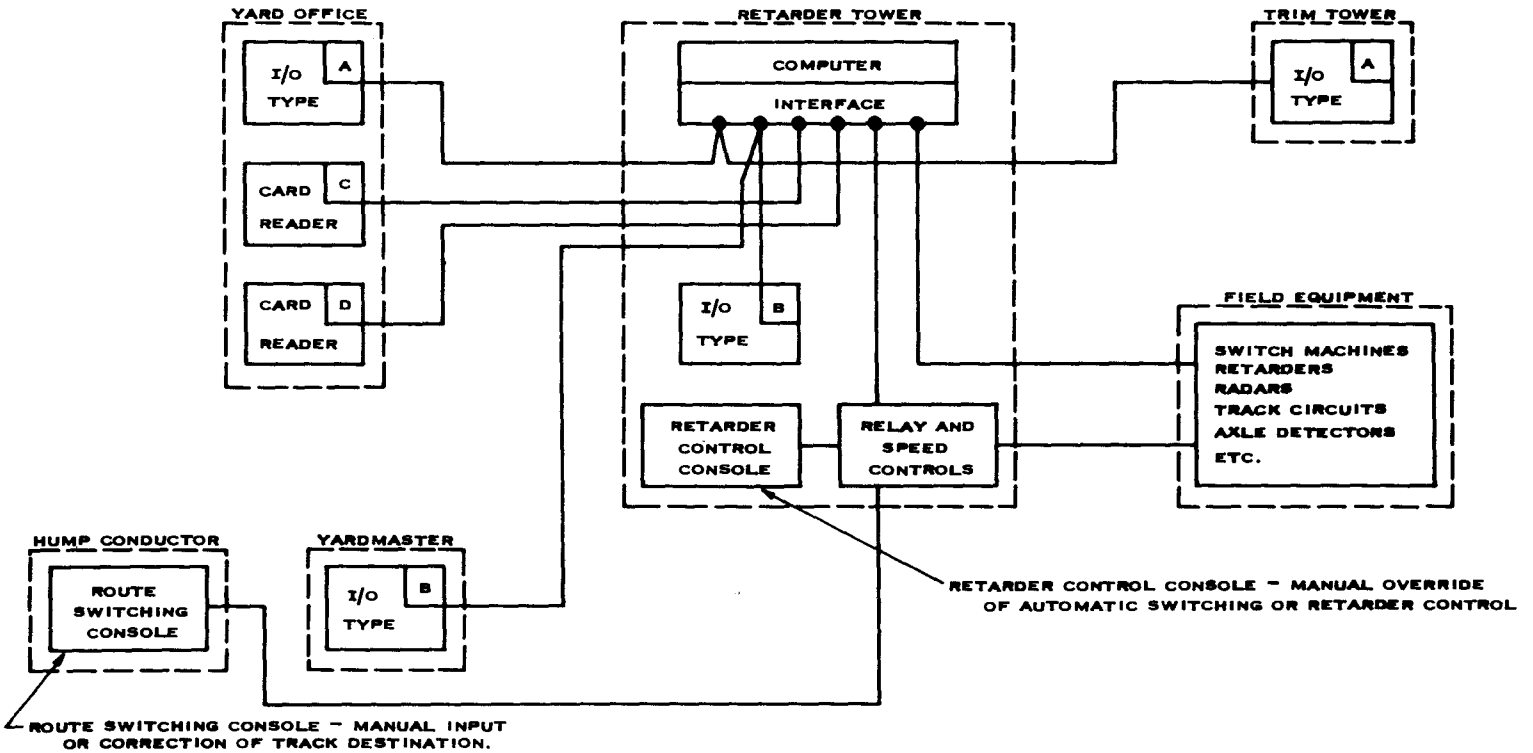

FUNCTIONS

A - TRACK LOGGING BY TRACK, WHEN REQUESTED
CORRECTIONS

B - SYSTEM STATISTICS, WHEN REQUESTED
TRACK CAR COUNT, WHEN REQUESTED
MAINTENANCE REPORTS
MISROUTE REPORTS
CORRECTIONS

C - CUT LIST INPUT

D - TRACK LOGGING BY TRACK, WHEN REQUESTED

WABCO

Standard VR-2 System Features

I. Equipment Status Reports

(a) Switch failing to complete its throw - including switch number.

(b) Automatic retarder control errors greater than ±0.5 M.P.H.

(c) Manual retarder operation during automatic humping resulting in speed error - including retarder number.

(d) Manual switch operation during automatic humping resulting in misroute - other than catchup.

(e) Certain Electronic Equipment failures.

II. Yard System Statistics Reports

(a) "Track full" based on distance to go.

(b) Cuts exceeding 120 ft.

(c) Number of trains classified.

(d) Number of cars classified.

(e) The amount of time the hump was utilized (based on hump slow signal and HAT track circuit occupancy.)

(f) The amount of time required for trimming operations (based on clear trim signal)

(g) Elapsed time on reports, items c through f.

III. Long Car Protection

(a) Car presence information furnished to computer will provide long car protection during humping operation.

WABCO

Additional VR-2 System Features

(Available with slight increase in system price)

IV. Car Catchup and Misroute Report

1. Report misrouted cars, by line number (by car initial and number if desired) - including time and switch number.

   This is done with count-in, count-out logic - (wheel detectors)

V. Anti-Cornering

1. Prevention of cornering based on speed measurements of closely following cars.

VI. Track Status Report

1. Individual track logging including car initial and number (On Demand).

2. Changing of the consist of a body track by trimming moves introduced into the computer via a typewriter input.

3. Number of cars on track including total gross weight.

BASIC MANUAL

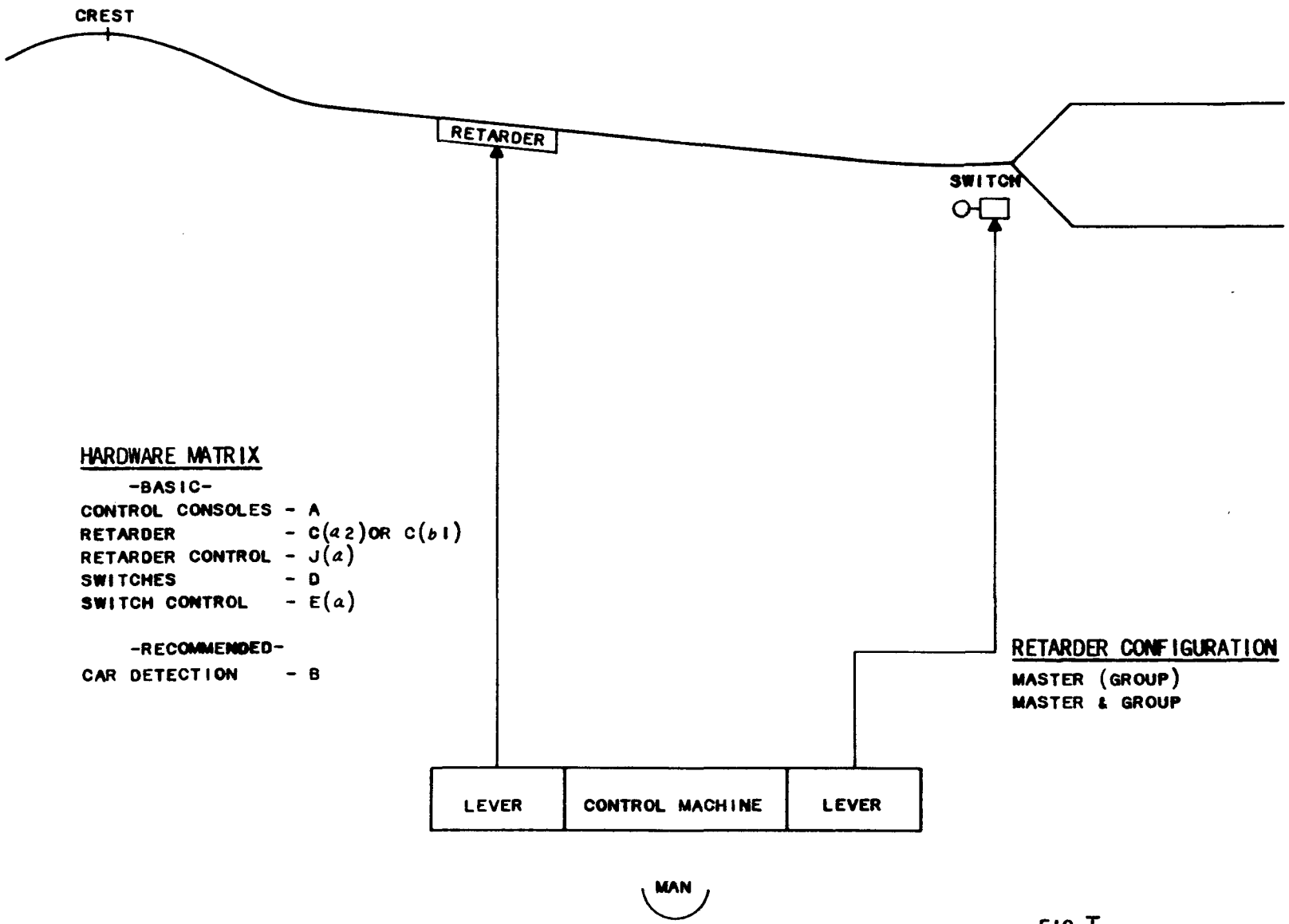

FIG I

MODIFIED MANUAL

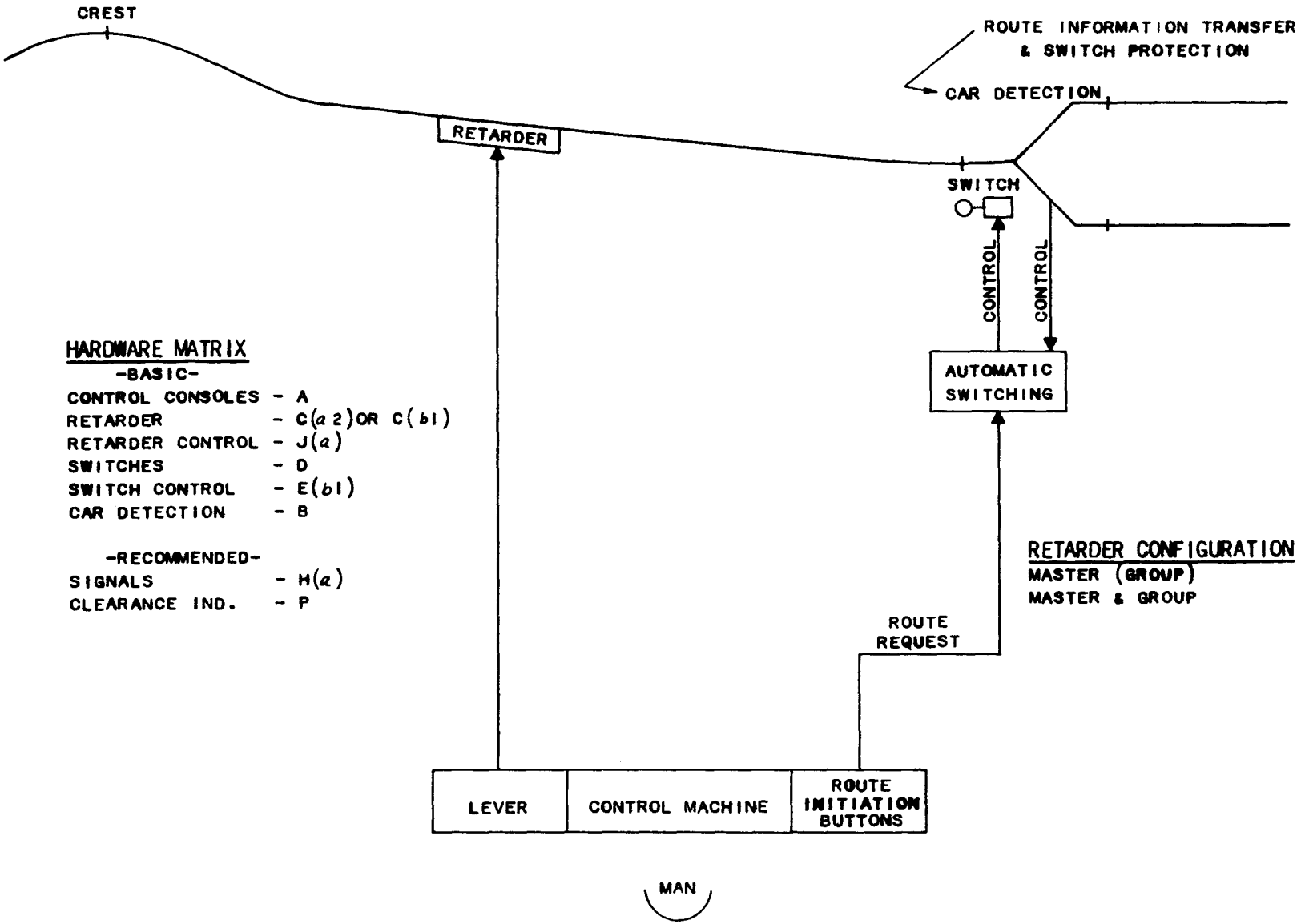

FIG II

BASIC SEMI - AUTOMATIC
(WEIGHT PROPORTIONAL RETARDER)
(SELECTED SPEED CONTROL)

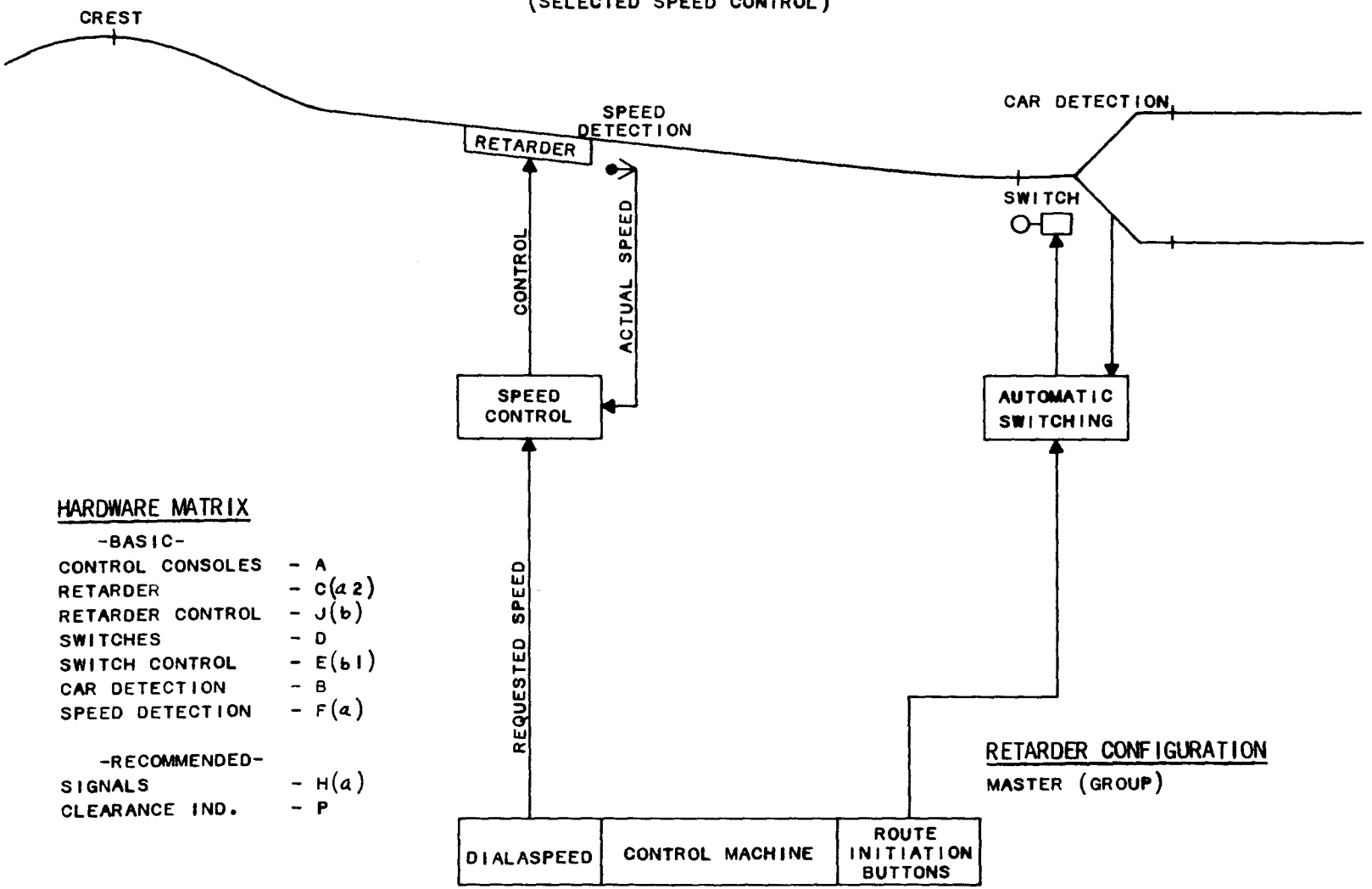

HARDWARE MATRIX

-BASIC-

CONTROL CONSOLES	- A
RETARDER	- C(a 2)
RETARDER CONTROL	- J(b)
SWITCHES	- D
SWITCH CONTROL	- E(b 1)
CAR DETECTION	- B
SPEED DETECTION	- F(a)

-RECOMMENDED-

SIGNALS	- H(a)
CLEARANCE IND.	- P

RETARDER CONFIGURATION

MASTER (GROUP)

FIG III a

BASIC SEMI - AUTOMATIC
(AIR RETARDER)
(SELECTED SPEED CONTROL)

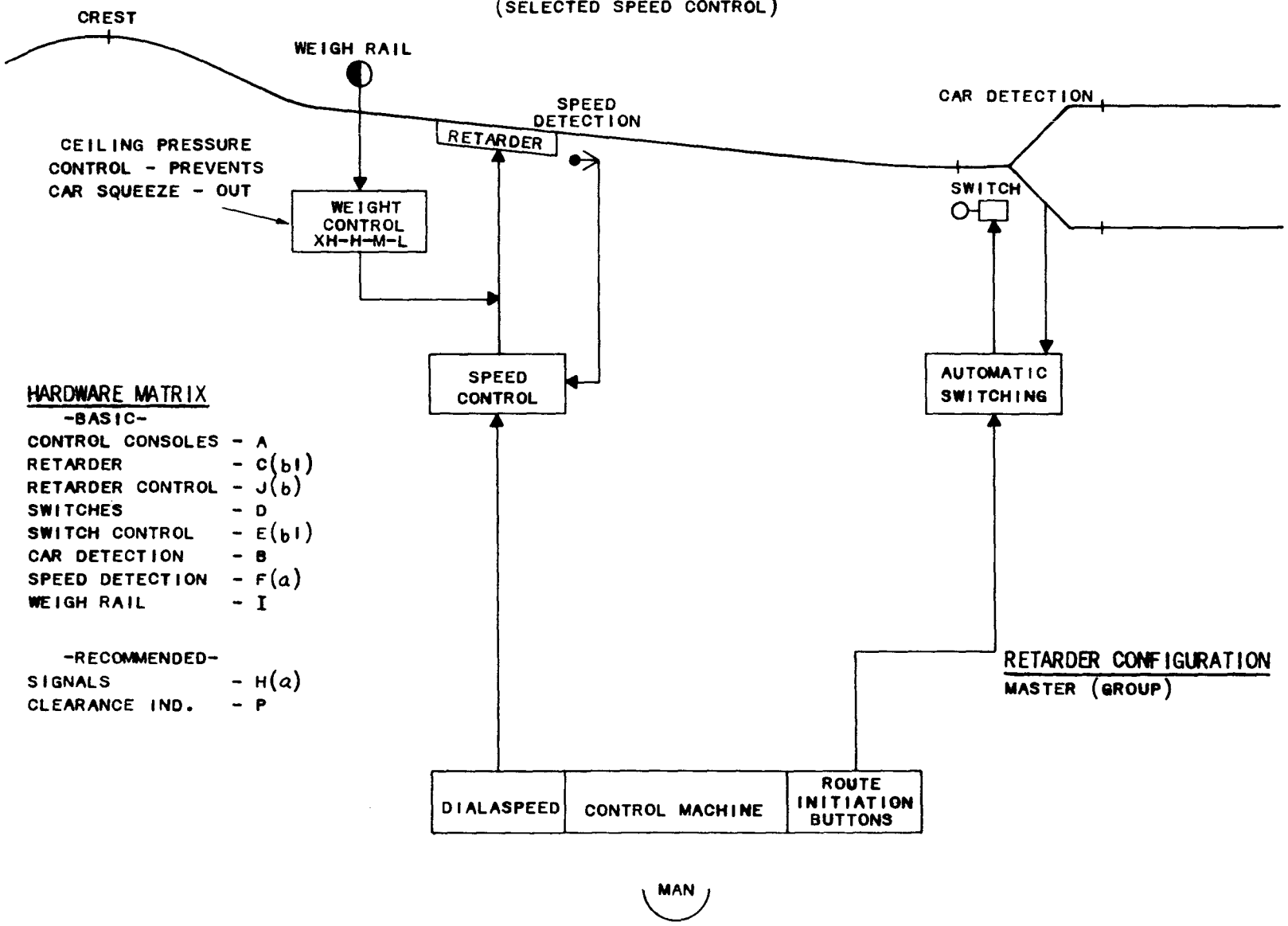

FIG III b

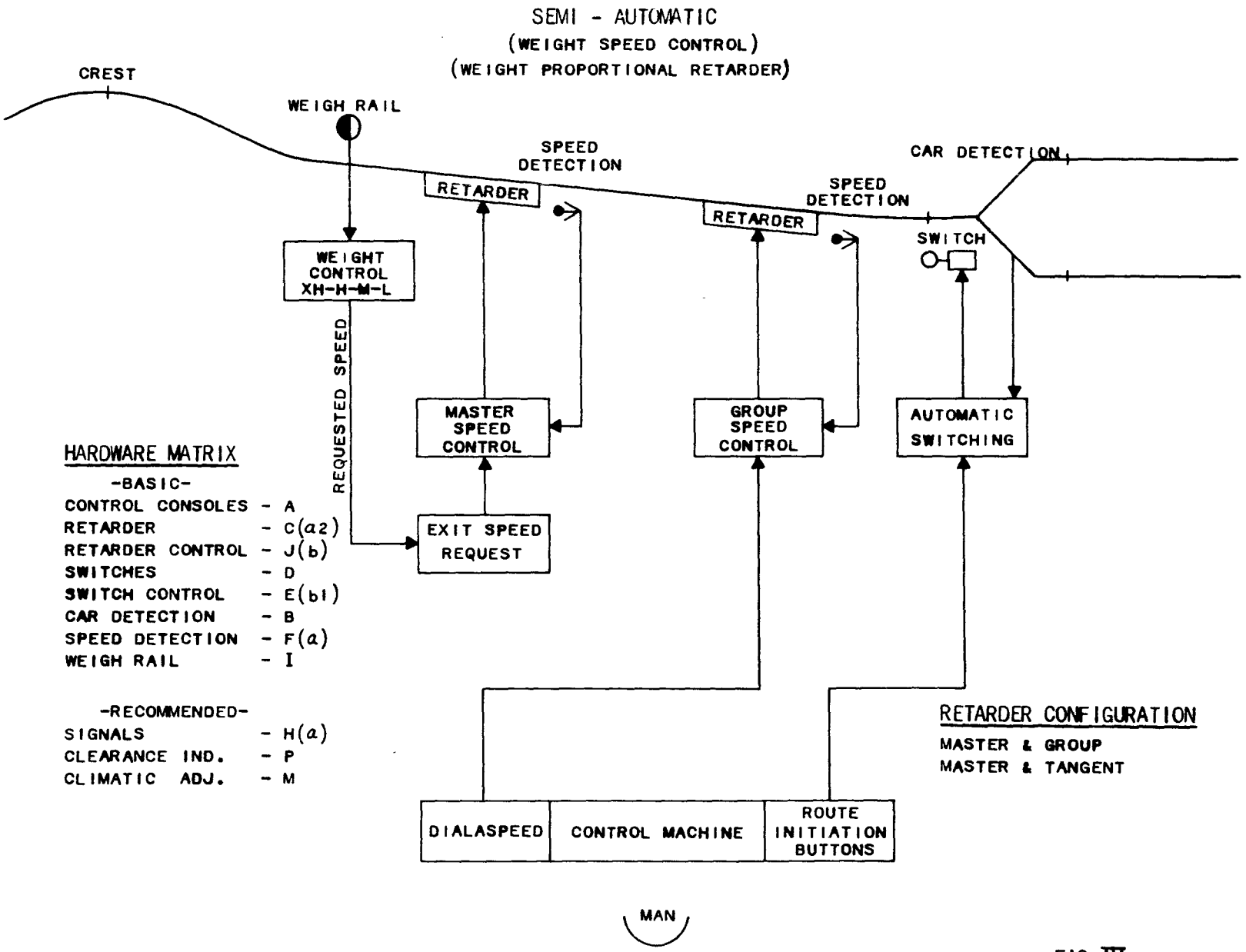
SEMI - AUTOMATIC
(WEIGHT SPEED CONTROL)
(WEIGHT PROPORTIONAL RETARDER)
CREST
WEIGH RAIL
SPEED DETECTION
RETARDER
SPEED DETECTION
RETARDER
CAR DETECTION
SWITCH
WEIGHT CONTROL XH-H-M-L
REQUESTED SPEED
MASTER SPEED CONTROL
GROUP SPEED CONTROL
AUTOMATIC SWITCHING
EXIT SPEED REQUEST
HARDWARE MATRIX
-BASIC-
CONTROL CONSOLES - A
RETARDER - C(a2)
RETARDER CONTROL - J(b)
SWITCHES - D
SWITCH CONTROL - E(b1)
CAR DETECTION - B
SPEED DETECTION - F(a)
WEIGH RAIL - I
-RECOMMENDED-
SIGNALS - H(a)
CLEARANCE IND. - P
CLIMATIC ADJ. - M
RETARDER CONFIGURATION
MASTER & GROUP
MASTER & TANGENT
DIALASPEED
CONTROL MACHINE
ROUTE INITIATION BUTTONS
MAN

FIG IV a

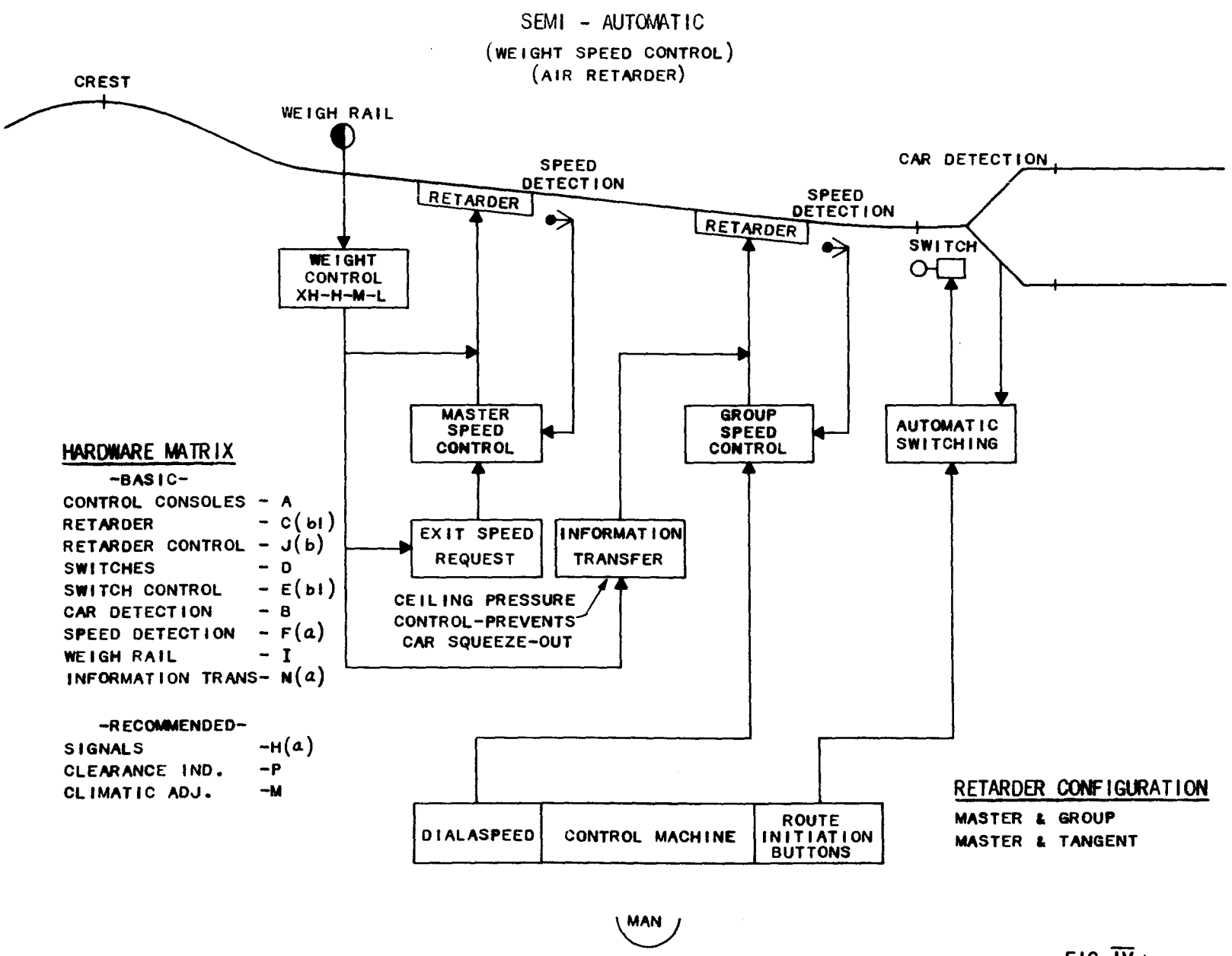
SEMI - AUTOMATIC
(WEIGHT SPEED CONTROL)
(AIR RETARDER)
CREST
WEIGH RAIL
SPEED DETECTION
RETARDER
SPEED DETECTION
RETARDER
CAR DETECTION
SWITCH
WEIGHT CONTROL XH-H-M-L
MASTER SPEED CONTROL
GROUP SPEED CONTROL
AUTOMATIC SWITCHING
EXIT SPEED REQUEST
INFORMATION TRANSFER
CEILING PRESSURE CONTROL-PREVENTS CAR SQUEEZE-OUT
HARDWARE MATRIX
-BASIC-
CONTROL CONSOLES - A
RETARDER - C(bl)
RETARDER CONTROL - J(b)
SWITCHES - D
SWITCH CONTROL - E(bl)
CAR DETECTION - B
SPEED DETECTION - F(a)
WEIGH RAIL - I
INFORMATION TRANS- N(a)
-RECOMMENDED-
SIGNALS -H(a)
CLEARANCE IND. -P
CLIMATIC ADJ. -M
DIALASPEED
CONTROL MACHINE
ROUTE INITIATION BUTTONS
RETARDER CONFIGURATION
MASTER & GROUP
MASTER & TANGENT
MAN

FIG IV b

MODIFIED SEMI - AUTOMATIC
(WEIGHT PROPORTIONAL RETARDER)
(ENTERING - SPEED CONTROL)

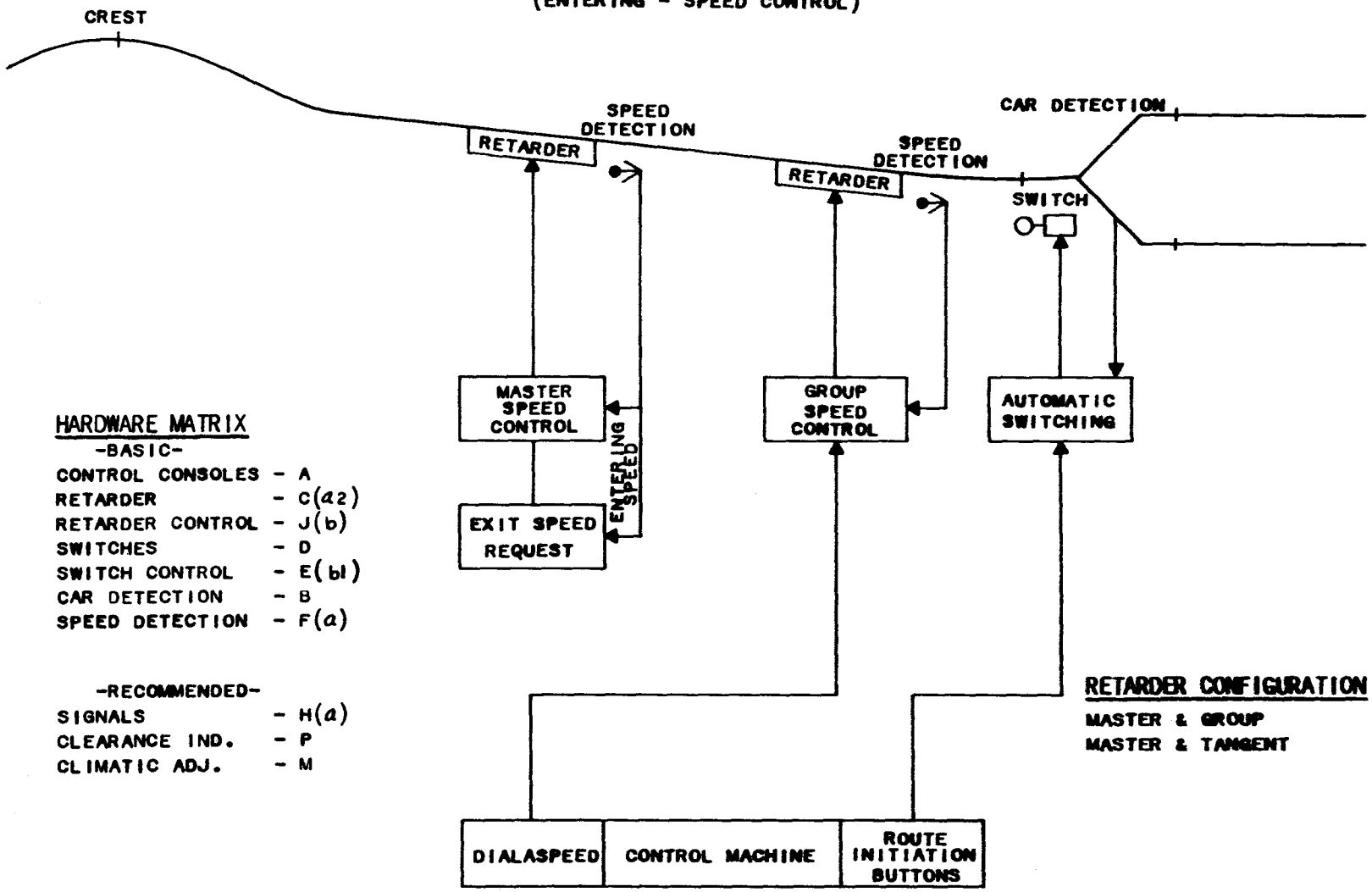

HARDWARE MATRIX

-BASIC-

CONTROL CONSOLES	- A
RETARDER	- C(a2)
RETARDER CONTROL	- J(b)
SWITCHES	- D
SWITCH CONTROL	- E(b1)
CAR DETECTION	- B
SPEED DETECTION	- F(a)

-RECOMMENDED-

SIGNALS	- H(a)
CLEARANCE IND.	- P
CLIMATIC ADJ.	- M

RETARDER CONFIGURATION

MASTER & GROUP
MASTER & TANGENT

FIG V a

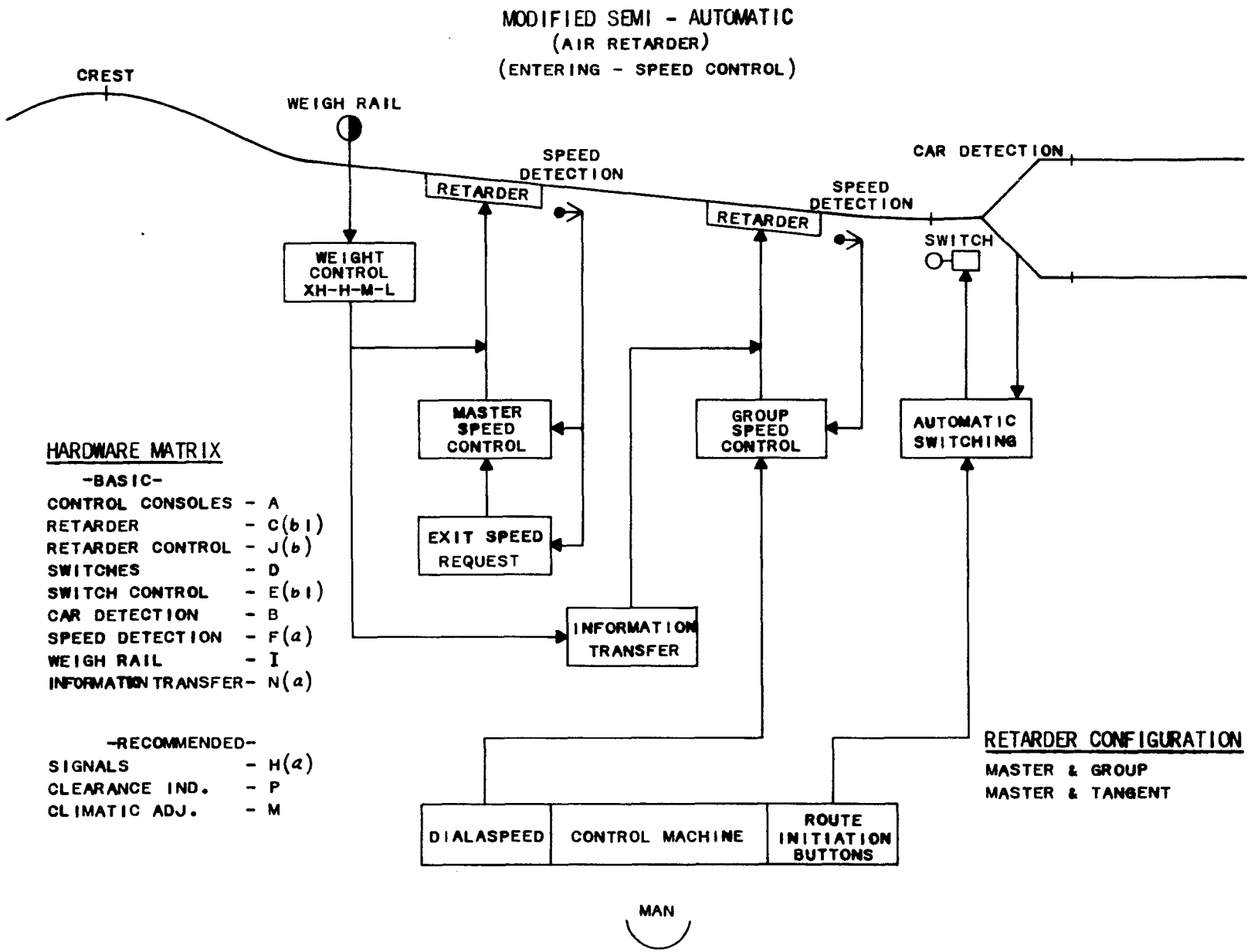
MODIFIED SEMI - AUTOMATIC
(AIR RETARDER)
(ENTERING - SPEED CONTROL)
CREST
WEIGH RAIL
SPEED DETECTION
RETARDER
SPEED DETECTION
RETARDER
CAR DETECTION
SWITCH
WEIGHT CONTROL XH-H-M-L
MASTER SPEED CONTROL
GROUP SPEED CONTROL
AUTOMATIC SWITCHING
EXIT SPEED REQUEST
INFORMATION TRANSFER
HARDWARE MATRIX
-BASIC-
CONTROL CONSOLES - A
RETARDER - C(b1)
RETARDER CONTROL - J(b)
SWITCHES - D
SWITCH CONTROL - E(b1)
CAR DETECTION - B
SPEED DETECTION - F(a)
WEIGH RAIL - I
INFORMATION TRANSFER - N(a)
-RECOMMENDED-
SIGNALS - H(a)
CLEARANCE IND. - P
CLIMATIC ADJ. - M
RETARDER CONFIGURATION
MASTER & GROUP
MASTER & TANGENT
DIALASPEED
CONTROL MACHINE
ROUTE INITIATION BUTTONS
MAN

FIG V b

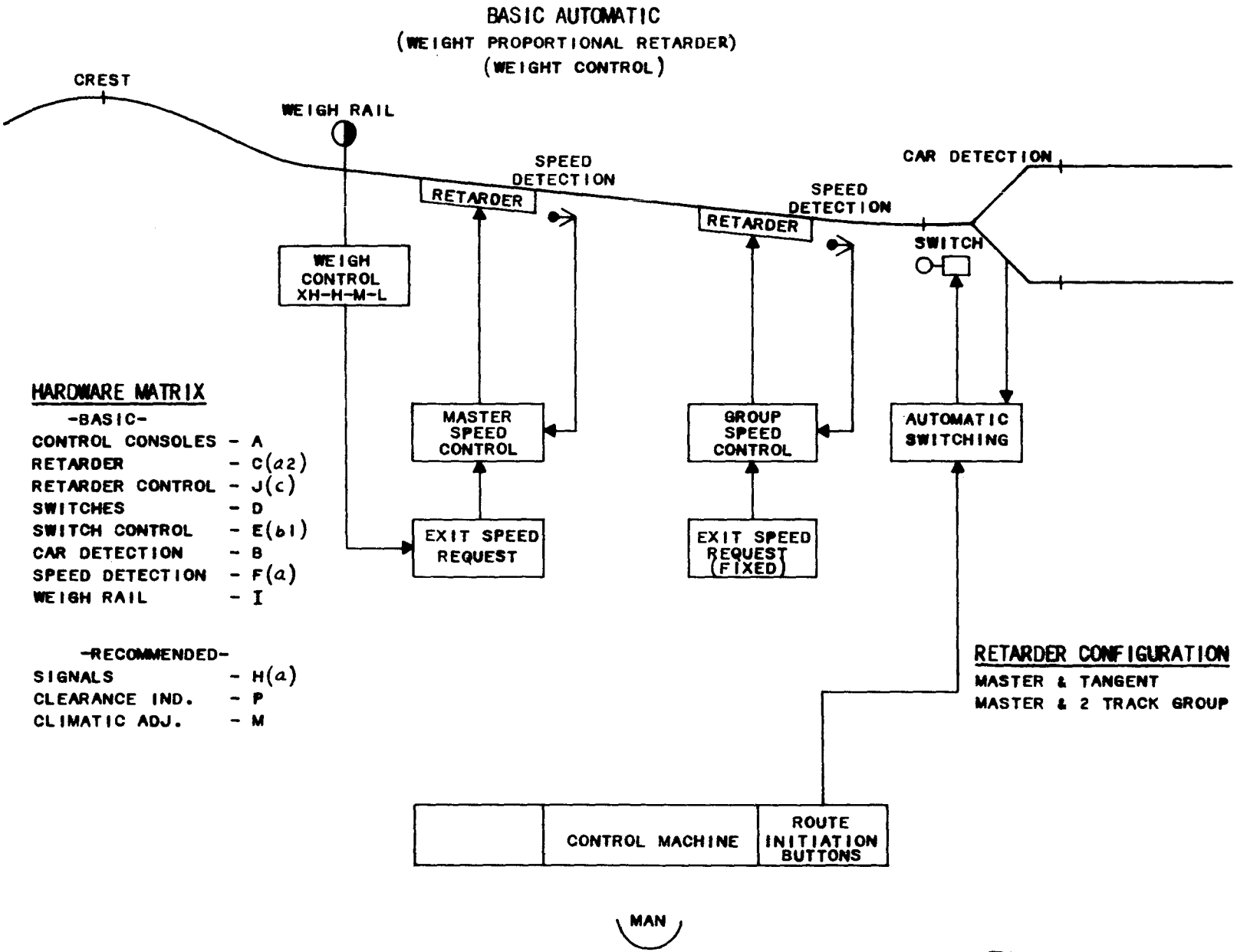
BASIC AUTOMATIC
(WEIGHT PROPORTIONAL RETARDER)
(WEIGHT CONTROL)
CREST
WEIGH RAIL
SPEED DETECTION
RETARDER
SPEED DETECTION
RETARDER
CAR DETECTION
SWITCH
WEIGH CONTROL XH-H-M-L
MASTER SPEED CONTROL
GROUP SPEED CONTROL
AUTOMATIC SWITCHING
EXIT SPEED REQUEST
EXIT SPEED REQUEST (FIXED)
HARDWARE MATRIX
-BASIC-
CONTROL CONSOLES - A
RETARDER - C(a2)
RETARDER CONTROL - J(c)
SWITCHES - D
SWITCH CONTROL - E(b1)
CAR DETECTION - B
SPEED DETECTION - F(a)
WEIGH RAIL - I
-RECOMMENDED-
SIGNALS - H(a)
CLEARANCE IND. - P
CLIMATIC ADJ. - M
RETARDER CONFIGURATION
MASTER & TANGENT
MASTER & 2 TRACK GROUP
CONTROL MACHINE
ROUTE INITIATION BUTTONS
MAN

FIG VI a

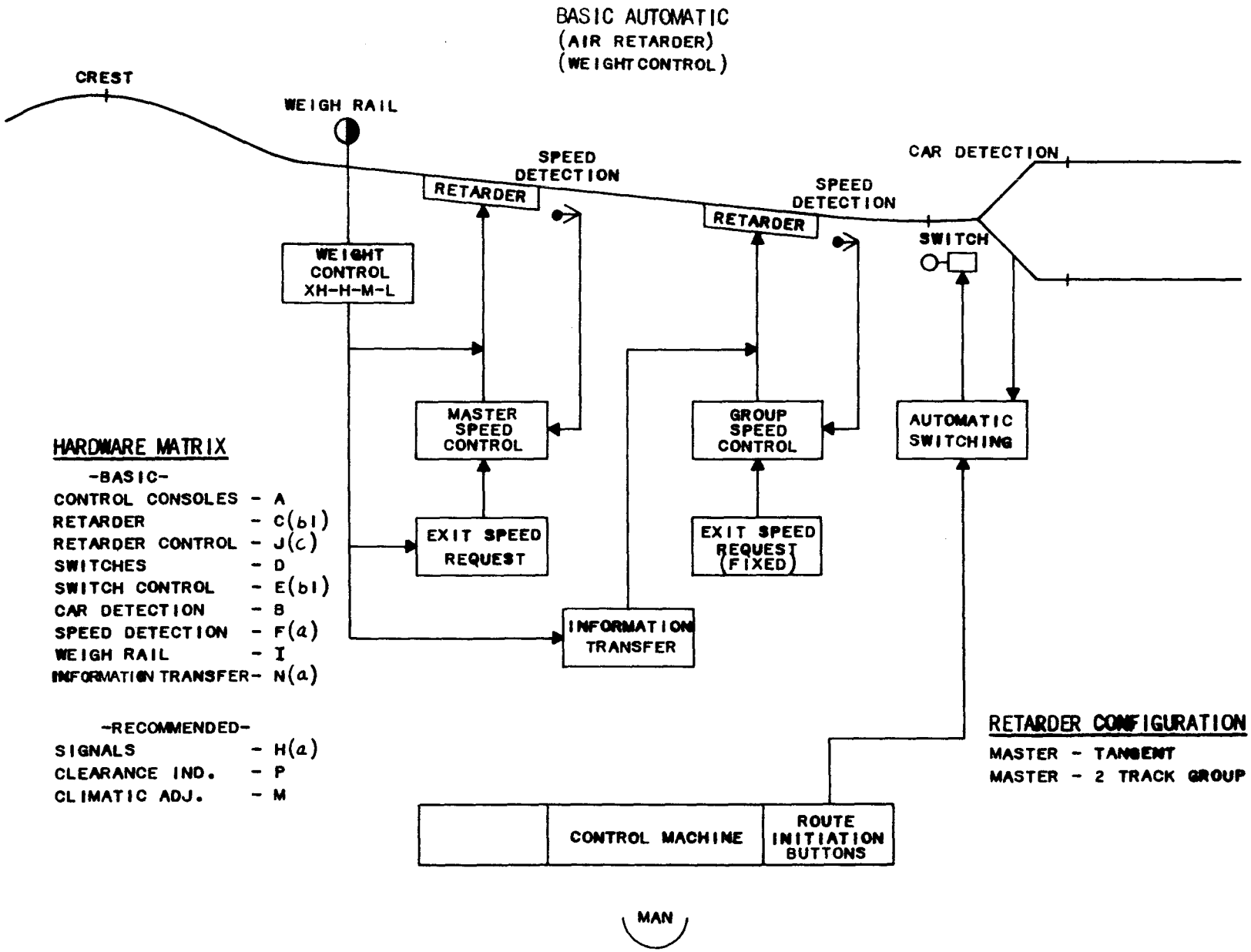
BASIC AUTOMATIC
(AIR RETARDER)
(WEIGHT CONTROL)
CREST
WEIGH RAIL
SPEED DETECTION
RETARDER
SPEED DETECTION
RETARDER
CAR DETECTION
SWITCH
WEIGHT CONTROL XH-H-M-L
MASTER SPEED CONTROL
GROUP SPEED CONTROL
AUTOMATIC SWITCHING
EXIT SPEED REQUEST
EXIT SPEED REQUEST (FIXED)
INFORMATION TRANSFER
HARDWARE MATRIX
-BASIC-
CONTROL CONSOLES - A
RETARDER - C(b1)
RETARDER CONTROL - J(c)
SWITCHES - D
SWITCH CONTROL - E(b1)
CAR DETECTION - B
SPEED DETECTION - F(a)
WEIGH RAIL - I
INFORMATION TRANSFER - N(a)
-RECOMMENDED-
SIGNALS - H(a)
CLEARANCE IND. - P
CLIMATIC ADJ. - M
RETARDER CONFIGURATION
MASTER - TANGENT
MASTER - 2 TRACK GROUP
CONTROL MACHINE
ROUTE INITIATION BUTTONS
MAN

FIG VI b

BASIC AUTOMATIC
(WEIGHT PROPORTIONAL RETARDER)
(ENTERING - SPEED CONTROL)

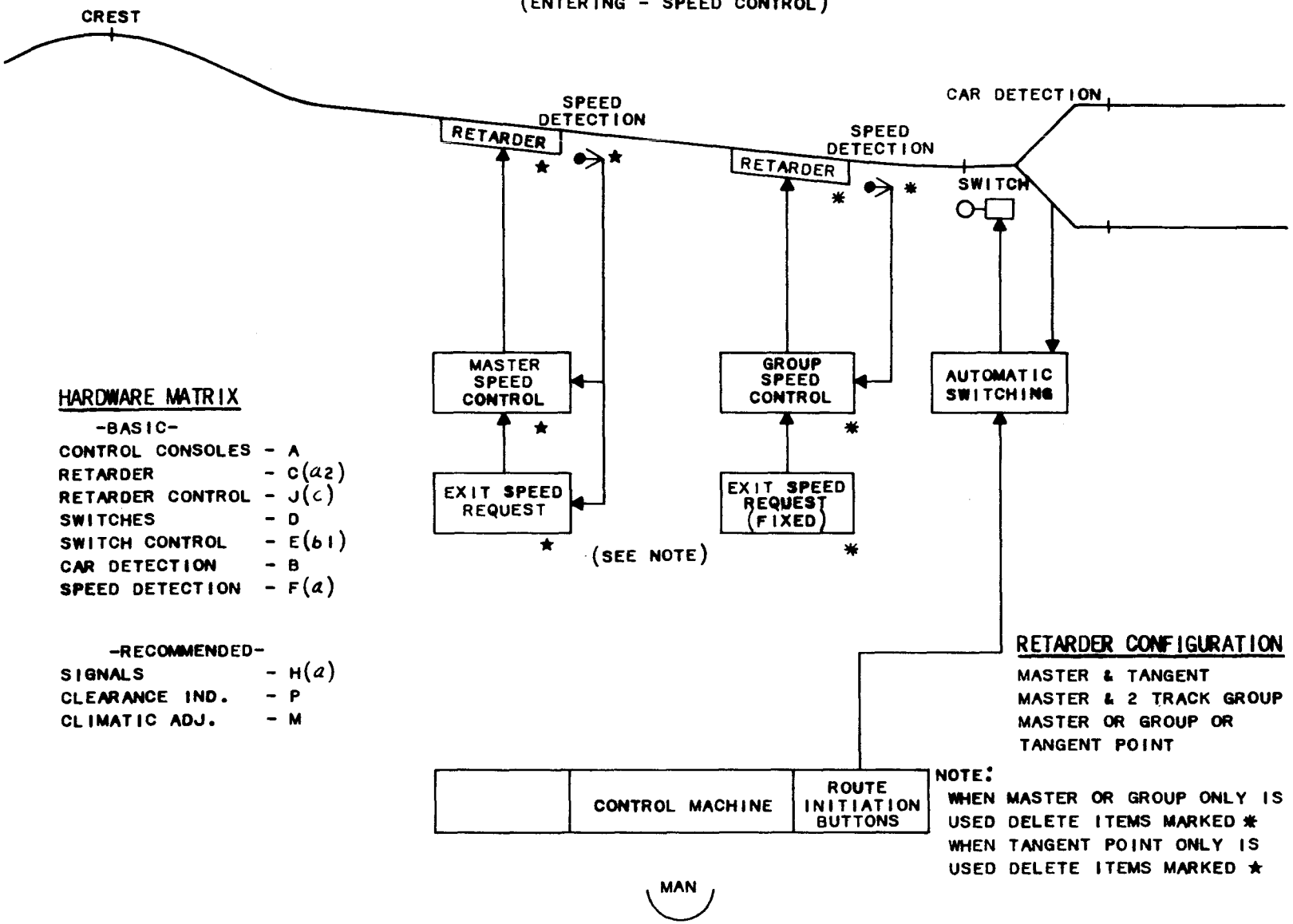

HARDWARE MATRIX

-BASIC-

CONTROL CONSOLES	- A
RETARDER	- C(a2)
RETARDER CONTROL	- J(c)
SWITCHES	- D
SWITCH CONTROL	- E(b1)
CAR DETECTION	- B
SPEED DETECTION	- F(a)

-RECOMMENDED-

SIGNALS	- H(a)
CLEARANCE IND.	- P
CLIMATIC ADJ.	- M

RETARDER CONFIGURATION

MASTER & TANGENT
MASTER & 2 TRACK GROUP
MASTER OR GROUP OR
TANGENT POINT

NOTE:
WHEN MASTER OR GROUP ONLY IS USED DELETE ITEMS MARKED ✱
WHEN TANGENT POINT ONLY IS USED DELETE ITEMS MARKED ★

FIG VI c

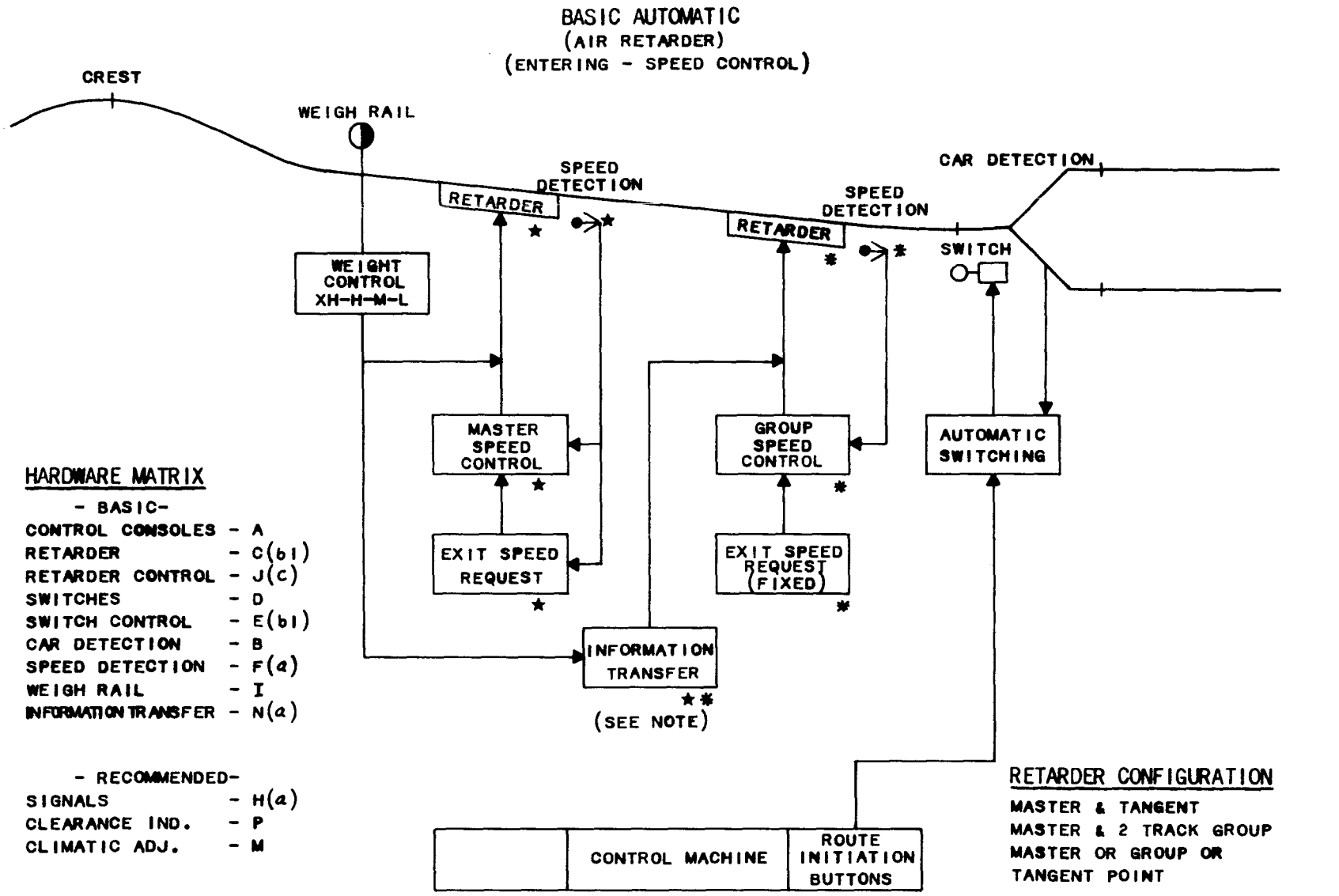
BASIC AUTOMATIC
(AIR RETARDER)
(ENTERING - SPEED CONTROL)
CREST
WEIGH RAIL
SPEED DETECTION
RETARDER
SPEED DETECTION
RETARDER
CAR DETECTION
SWITCH
WEIGHT CONTROL XH-H-M-L
MASTER SPEED CONTROL
GROUP SPEED CONTROL
AUTOMATIC SWITCHING
EXIT SPEED REQUEST
EXIT SPEED REQUEST (FIXED)
INFORMATION TRANSFER
(SEE NOTE)
CONTROL MACHINE
ROUTE INITIATION BUTTONS
MAN
HARDWARE MATRIX
- BASIC-
CONTROL CONSOLES - A
RETARDER - C(b1)
RETARDER CONTROL - J(c)
SWITCHES - D
SWITCH CONTROL - E(b1)
CAR DETECTION - B
SPEED DETECTION - F(a)
WEIGH RAIL - I
INFORMATION TRANSFER - N(a)
- RECOMMENDED-
SIGNALS - H(a)
CLEARANCE IND. - P
CLIMATIC ADJ. - M
RETARDER CONFIGURATION
MASTER & TANGENT
MASTER & 2 TRACK GROUP
MASTER OR GROUP OR TANGENT POINT
NOTE:
WHEN MASTER OR GROUP ONLY IS USED
DELETE ITEMS MARKED *
WHEN TANGENT POINT ONLY IS USED
DELETE ITEMS MARKED ★

FIG VI d

MODIFIED BASIC AUTOMATIC
(WEIGHT PROPORTIONAL RETARDER)
(MODIFIED ENTERING - SPEED CONTROL)

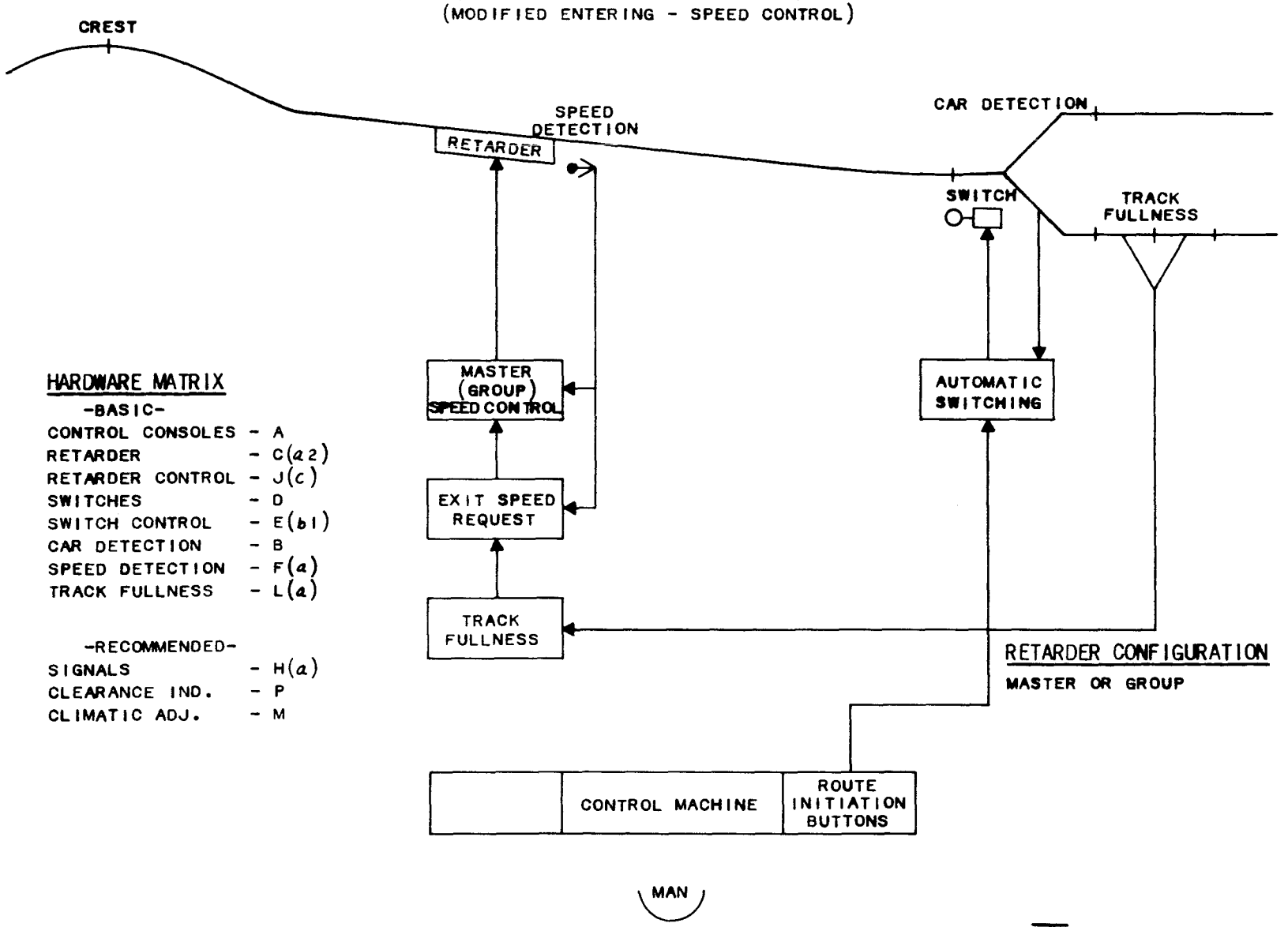

HARDWARE MATRIX

-BASIC-

CONTROL CONSOLES	- A
RETARDER	- C(a2)
RETARDER CONTROL	- J(c)
SWITCHES	- D
SWITCH CONTROL	- E(b1)
CAR DETECTION	- B
SPEED DETECTION	- F(a)
TRACK FULLNESS	- L(a)

-RECOMMENDED-

SIGNALS	- H(a)
CLEARANCE IND.	- P
CLIMATIC ADJ.	- M

FIG VII a

MODIFIED BASIC AUTOMATIC
(AIR RETARDER)
(MODIFIED ENTERING - SPEED CONTROL)

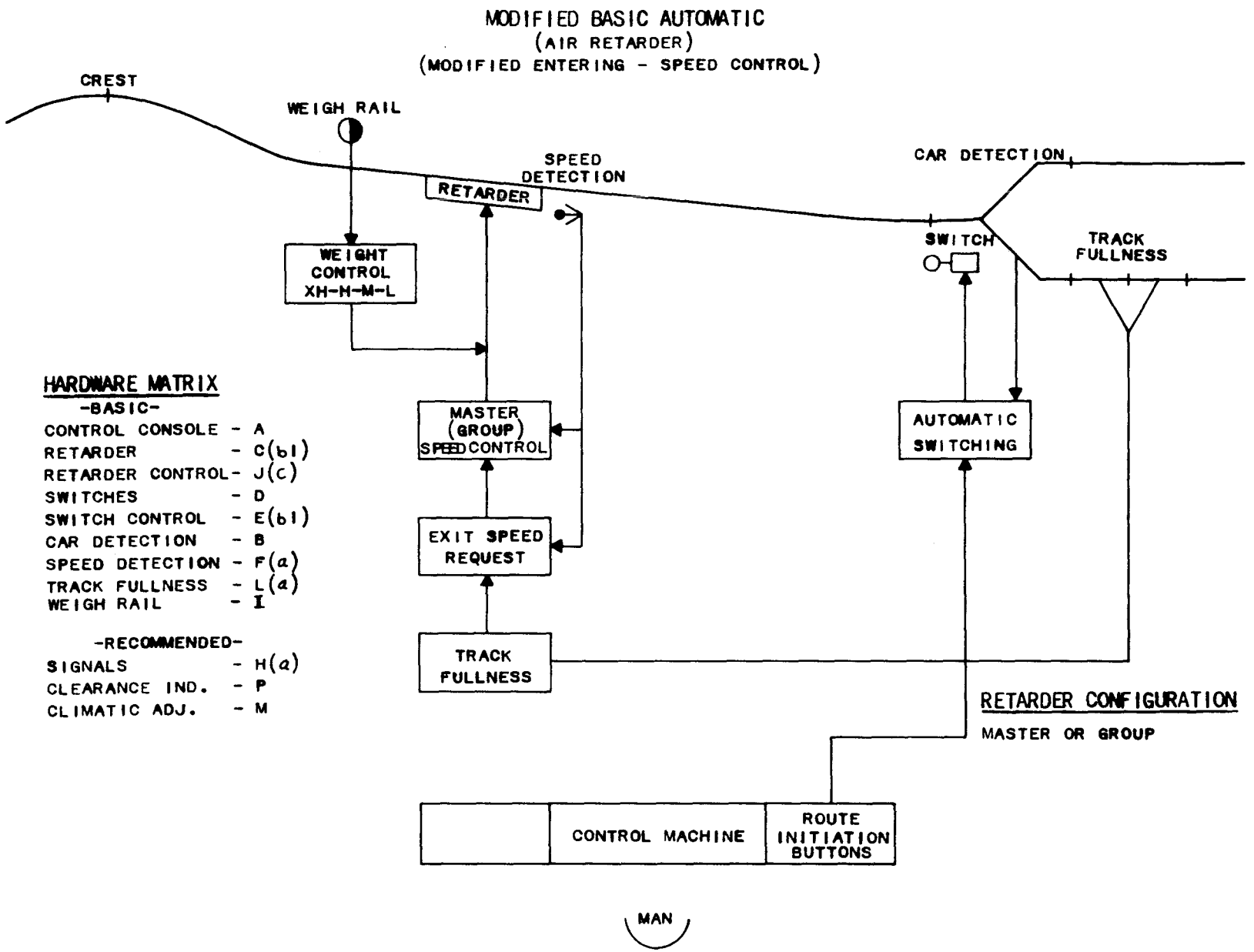

HARDWARE MATRIX

-BASIC-

CONTROL CONSOLE - A
RETARDER - C(b1)
RETARDER CONTROL - J(c)
SWITCHES - D
SWITCH CONTROL - E(b1)
CAR DETECTION - B
SPEED DETECTION - F(a)
TRACK FULLNESS - L(a)
WEIGH RAIL - I

-RECOMMENDED-

SIGNALS - H(a)
CLEARANCE IND. - P
CLIMATIC ADJ. - M

RETARDER CONFIGURATION

MASTER OR GROUP

FIG VII b

AUTOMATIC
(WEIGHT PROPORTIONAL RETARDER)

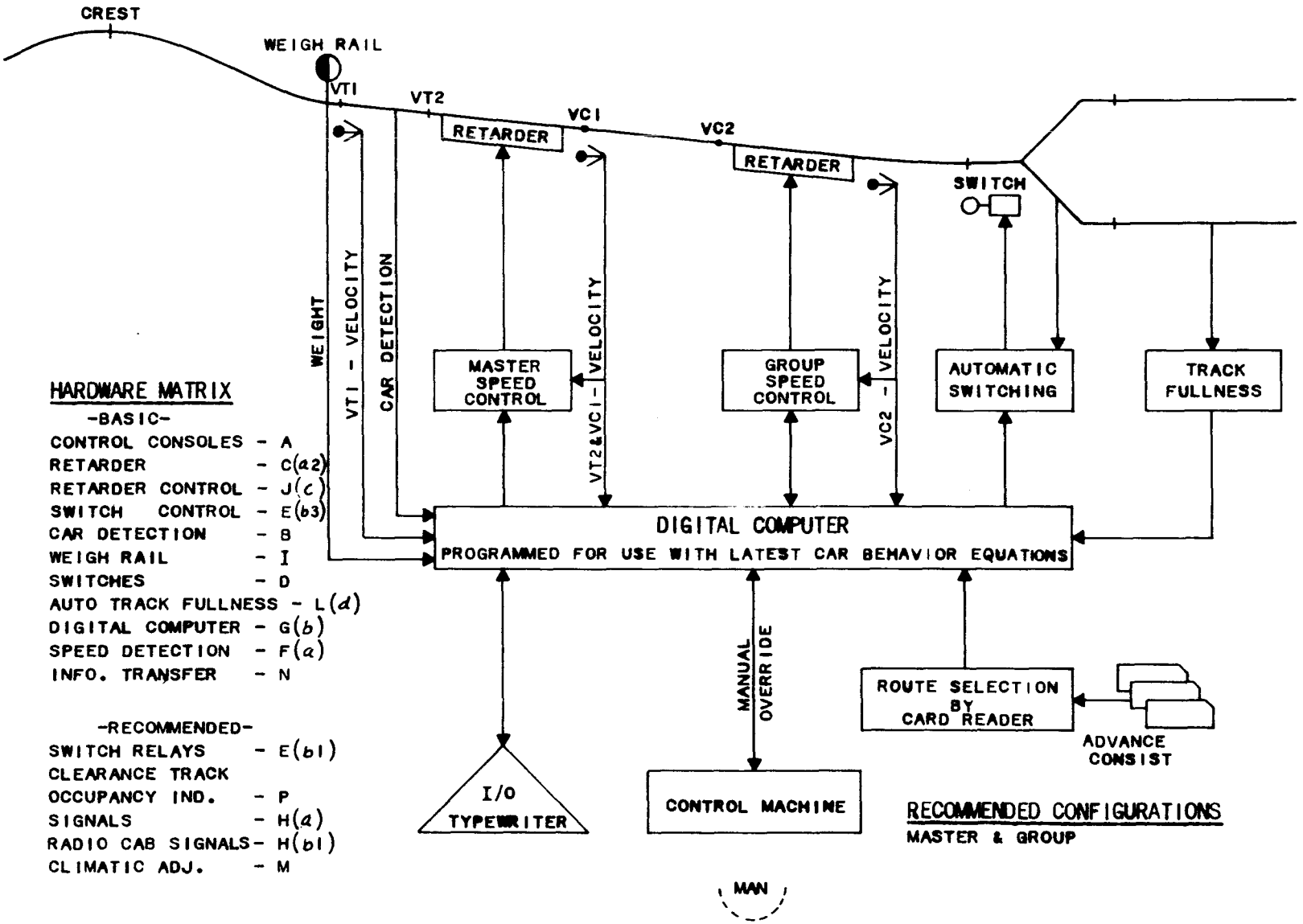

HARDWARE MATRIX

-BASIC-

CONTROL CONSOLES - A
RETARDER - C(a2)
RETARDER CONTROL - J(c)
SWITCH CONTROL - E(b3)
CAR DETECTION - B
WEIGH RAIL - I
SWITCHES - D
AUTO TRACK FULLNESS - L(d)
DIGITAL COMPUTER - G(b)
SPEED DETECTION - F(a)
INFO. TRANSFER - N

-RECOMMENDED-

SWITCH RELAYS - E(b1)
CLEARANCE TRACK OCCUPANCY IND. - P
SIGNALS - H(a)
RADIO CAB SIGNALS - H(b1)
CLIMATIC ADJ. - M

RECOMMENDED CONFIGURATIONS
MASTER & GROUP

FIG VIII a

AUTOMATIC
(AIR RETARDER)

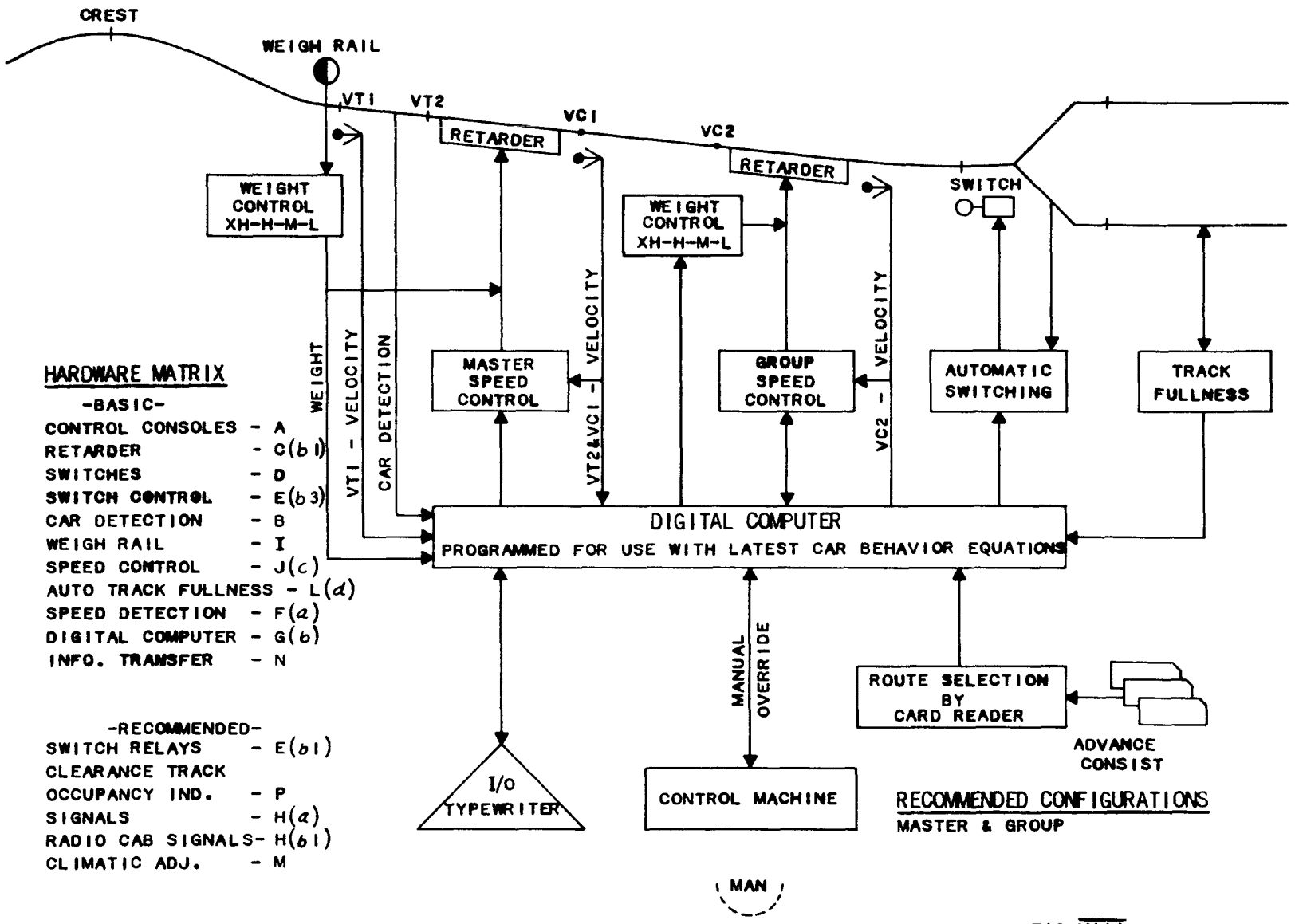

HARDWARE MATRIX

-BASIC-

CONTROL CONSOLES	- A
RETARDER	- C(b1)
SWITCHES	- D
SWITCH CONTROL	- E(b3)
CAR DETECTION	- B
WEIGH RAIL	- I
SPEED CONTROL	- J(c)
AUTO TRACK FULLNESS	- L(d)
SPEED DETECTION	- F(a)
DIGITAL COMPUTER	- G(b)
INFO. TRANSFER	- N

-RECOMMENDED-

SWITCH RELAYS	- E(b1)
CLEARANCE TRACK OCCUPANCY IND.	- P
SIGNALS	- H(a)
RADIO CAB SIGNALS	- H(b1)
CLIMATIC ADJ.	- M

RECOMMENDED CONFIGURATIONS
MASTER & GROUP

FIG VIII b

CHAPTER XVI - COMMUNICATIONS

GENERAL

Communication is concerned with the conveyance of intelligence or information which implies the utilization of human sensory organs. Webster defines "Communication" as an act of transmitting; a verbal or written message; a system (such as telephone) for communicating.

Early Railroad Communications

As soon as the railroads added a second train to a railroad system the requirement for communications existed. This need to know of "clear track ahead" required an "act of communicating" which was accomplished by signs and indicators. In the early 1800's the "written message" by Time-Table operation became a standard procedure.

While the railroads operated under the Time-Table system with its disadvantages, complications, and delays, man's quest for better communications continued.

In the early 1830's, Samuel F.B. Morse, who was a well-known canvas painter, was to become a famous inventor. For twelve long, hard years Morse studied the properties of electricity and, in 1844, used his contrived "telegraph key" to send via wire, from the U.S. Supreme Court in Washington, D.C. to Baltimore, a great distance of forty miles, pulses of direct current. These pulses caused a crude instrument, called a "telegraph sounder", to flutter slowly up and down, forming a series of dots and dashes. The now famous message, "What hath God wrought!" was received and the "telegraph" was born.

From this beginning, communication engineers have been continually working with a changing voltage of a variable frequency. This voltage is applied to an end point where maximum output is desired. This output is obtained by constant output impedance, with varied magnitude of e.m.f., to bring us the modern railway communication systems of today.

Morse, of course, had envisioned the telegraph for its "transmission of intelligence" without any reference to railroad operations. The railroads soon incorporated the advantages of the telegraph instead of the very slow mail.

Charles Minot, the Superintendent of the Erie Railway, became impatient with the Time-Table method of railroading and its slowness of operation. On September 22, 1851, while aboard a west bound train standing in the siding at Turners (now Harriman), he decided to do something. His train was being

 ALL RIGHTS RESERVED

held for the east bound which had Time-Table superiority. Mr. Minot requested the station telegrapher to ask the telegrapher at Goshen, 14 miles to the west, if the overdue train had passed. The answer, "It has not," resulted in the issuance of the first telegraph "train order" as follows:

To Operator at Goshen

Hold east bound train till further orders.

(signed) Charles Minot, Supt.

A few years later at the 1876 Centennial Exhibition in Philadelphia, Alexander Graham Bell revealed his invention, "The Telephone", to America. By May 21, 1877, the first railroad telephone system was installed and operational on the Pennsylvania Railroad at Altoona. From 1877 until the 1940's the two systems of communications - telegraph and telephone - developed together on the American railroads. They became inseparable from railroad operations.

With the increased use of telegraph, early efforts were made in wireless telegraphy. In 1895, Marconi was successful with the first wireless message. However, until 1922, when the Nashville, Chattanooga and St. Louis made an attempt to use Marconi's great invention, the railroads ignored this potential tool. A multitude of technical problems caused this particular effort to be abondoned.

Railroad Communication of Today

The railroads of today use a myriad of complex communication circuits and equipment beyond those used for train operation and safety. This includes thousands of the following communications each day:

Car orders

Special routing

In-transit diversions and reconsignments of loads

Passenger reservations

Tracing of lost or delayed shipments

Advanced arrival notices

Advanced consists to switching yards

Passenger station announcements

Entertainment on and off trains

Knowledge of rolling stock location for per diem charges.

US&S DIV. WABCO - SWISSVALE, PA. ALL RIGHTS RESERVED

Communications have also become a tool for centralizing the non-operating functions of railroading. This has allowed a reduction of material inventories, produced information leading to cost savings, and allowed the combining of two or more facilities into one, etc.

Thus, railroad communications originate from employees' time sheets, agents' field reports, train conductor reports, roundhouses, fuel houses, various rip and repair tracks, yard offices, storerooms, commissaries, and from all levels of executive, sales, operating, engineering and legal departments.

A large portion of this information accumulates in accounting and statistical records. These records are periodically issued in special forms for the railroads' self-appraisal and to satisfy the requirements of local and federal government controlling agencies.

SYSTEMS

Telegraph

Communication by telegraphy depends upon the transmission of electrical signals which are arranged in a definite pattern so that they may be translated into language form. The oldest language form is the Morse Code, which a man translates from electrical code to written communication. Today the telegraph principle is used with many code formats and many input-output devices such as Teletype, DTS, Computer read and print-out, etc.

The telegraph circuit in its simplest form consists of a single wire between two points, equipped with a "key" at the sending end and a "relay" at the receiving end. These are connected to a battery with current flowing through the wire when the key is closed and returning to the battery through the earth ground. The flow of current is called the "mark" while no current flow is called the "space." This one-way telegraph circuit is normally referred to as a simplex circuit.

After the development of the telephone, it was routine to transmit D.C. telegraphy over the same pair of wires used for telephone. By use of special Simplex Coils, the D.C. currents could be applied to the telephone circuit in such a way as not to interfere with the telephone reception. When the wire pair is used "as a single telegraph wire" the circuit is referred to as a "Simplexed Telephone Circuit."

By use of Retardation Coils, the telephone pair can be used wherein each wire, along with the common earth return, gives an individual basic simplex telegraph circuit. This arrangement is commonly referred to as a "Composited Telephone Circuit."

A composite circuit can be arranged to allow the operation

US&S DIV. WABCO - SWISSVALE, PA. ALL RIGHTS RESERVED

of the associated transmitting (key) and receiving (sounder) apparatus at one location, in conjunction with associated transmitting and receiving equipment at another location. When such transmission and reception are simultaneous, the system is referred to as Full Duplex Operation.

Telephone

Telephone communication accomplishes the electrical transmission of speech by employing the mechanical energy of a speaker's voice to produce electrical energy having similar characteristics. The electrical energy is then converted into sound waves having similar characteristics at the listener's location.

The simple telephone requires a minimum of three elements: the transmitter, line, and receiver. The original telephone invented by Bell consisted of a receiver which also was the transmitter.

The normal ear has a low frequency response in the octave of 16 to 32 vibrations per second and a high frequency response in the octave of 16,000 to 32,000 vibrations per second, with 16 and 32,000 the extreme limits. Thus, audible sound is conveniently defined as a disturbance in the atmosphere when a form of wave motion is transmitted by alternate condensations and rarefactions of the atmosphere in cycles ranging from 16 to 32,000 per second.

Most distinctive sounds are those composed of fundamental and harmonic frequencies. Both are required to distinguish notes of different musical instruments when sounded at the same pitch.

Fortunately, most telephone transmission requirements are for conveying intelligence from speaker to listener. This requires only a small portion of the total audible sound range, usually considered as 300 to 3000 cycles. Many railroad telephone circuits utilize a portion of this for an additional telegraph (signaling) circuit and reduce the speech band from 300 to 2400 cycles.

Telephone systems on the railroads can be classified according to their uses as follows:

- Telephone Systems
  - Public (Bell System)
  - Private
    - Train Dispatching
    - Intercommunications
    - Paging
    - General Communications
      - Isolated
      - Interconnected

A public telephone system is operated for commercial profit, under fixed rates controlled by the FCC and State PUC, for the

US&S DIV. WABCO - SWISSVALE, PA. ALL RIGHTS RESERVED

service rendered. This type of service on railroads varies from the basic requirement of communications with those outside the railroads (customers, etc.), to a total package including all communication circuits used by the railroad.

Private telephone and telegraph systems are those operated and maintained by the railroad as an auxiliary in support of their main enterprise and not directly for commercial profit. Private systems such as dispatching, intercom, and paging usually are total systems within themselves, and have no facilities to be interconnected with other similar systems. Private systems for general communications are most often of the private branch exchange (PAX or PABX) type and are capable of, or intended to be, interconnected with other, usually public, systems.

Railroad telephone systems can also be classified according to their method of operation as follows:

- Telephone Systems
  - Manual
    - Local battery
    - Common battery
  - Automatic
    - Dial
    - Tone

Most railroad train dispatching telephone systems are common party line systems using local battery. In this system the dispatcher is connected and monitoring the telephone circuit at all times and is called by voice. To call a station on the line the dispatcher must cause the station bell or buzzer to operate. This has been done over the years using a Selector Key Apparatus unit at the dispatcher location and a Selector Set at the wayside station. The Selector Key applies a series of coded direct current pulses of alternating polarities on the line. These pulses are received by all Selector Sets on the line and are stepped one position for each polarity pulse. Periodically, there is a long pulse break and only those sets with a hold pin at this point remain counted up; all others fall back to a starting point. After a code of three sets of pulses (all codes have an equal number of total pulses), a local battery circuit will be completed and the bell rings. The whole code must be repeated for each "ring."

Railroad general communication circuits were all, until a few years ago, manual circuits similar to the train dispatching circuit. However, a switchboard operator replaced the dispatcher and several local battery, party line circuits terminated at this switchboard. The operator was called by using a magnet to send a variable voltage of approximately 20 cycles to activate an A.C. relay; this caused a lamp indication above the associated line jack. The operator would then assist by connecting the calling line to the line called, if required, and operating a selector key to ring the desired party.

US&S DIV. WABCO - SWISSVALE, PA. ALL RIGHTS RESERVED

In many locations where heavy railroad telephone traffic is being handled, the railroads are switching over to private automatic exchanges (PABX) and requiring operators only for cross-connecting manual with automatic switchboards.

Several of the major railroads have their own private exchanges, with direct distance dialing between major cities of their rail system. Dialing is completed by the telegraphic process either with mechanical dial D.C. line pulses or with sequential multiple tone pulses. Some automatic systems use a combination of D.C. and tone telegraphy for line and station selection.

Carrier

Following World War II, the railroads began to take advantage of the great advance in communication technology. During the past 20 years, the simple telegraph and telephone have gone through many changes until today's railroad communication systems have little resemblance to those of yesterday.

The telephone pair has been upgraded to handle a frequency range much greater than voice, and new carrier circuits have been added for both telephone and telegraph.

A carrier system employs the multiplexing of several narrow band systems to a common wide band system. Physical facilities such as open wire pair, cable pair, or coaxial conductors are employed as transmission media.

These carrier circuits use a frequency range from 3500 Hz to 500 KHz on open and cable pairs, and much higher frequency on coaxial cables.

Today's wire pair carrier systems have a capacity of up to 24 voice channels. Several carrier channels can be "stacked" one one transmission medium, dependent upon total carrier bandwidths and type of transmission medium being used.

Carrier systems employ various types of modulation including amplitude, double sideband, single sideband, frequency, and pulse code.

The increased daily requirements placed upon railroad telegraph circuits made it impossible to continue the manual key and sounder telegraph, and the manual telephone switchboard. This caused the railroads to embark upon a new era of installing automatic dial telephone systems, teletype systems, facsimile systems, and even cross country computer systems.

Radio

From 1922 to 1930, railroads experimented with low band A.M. radio. However, the Federal Communication Commission, in

US&S DIV. WABCO - SWISSVALE, PA. ALL RIGHTS RESERVED

1930, ruled that there was not enough radio spectrum and cancelled all experimental licenses. During World War II higher frequencies became practical and, in 1944, the Atlantic Coast Line applied for a VHF license - Railroad Radio again became a reality. In 1945, the FCC allocated to the railroads 60 clear channels in the 160 MHz VHF band for narrow band (± 15 KHz deviation) operation.

In the mid 1950's, the FCC split the channels (to ± 5 KHz deviation) in the VHF band and the railroads lost in total band width but gained in total number of channels as described on pages following this chapter.

The railroads of today use voice radio for end to end, wayside, and yard communications. There are hand carried low power units of 1/2 to 5 watts of R.F. power, and mobile installations, on diesel locomotives, cabooses, work equipment, etc., use semi-permanent mounted units with a nominal R.F. power of 25 to 35 watts. In addition, Fixed wayside installations have R.F. power of 25 to the maximum limit of 60 watts (120 watts input power).

Some railroad radio systems cover only a small area, while others are designed to cover hundreds of miles of track using Centralized Radio Control in conjunction with standard telephone circuits.

Before a railroad can use radio, several requirements must be met as listed below:

1. Determine a clear radio channel and apply to the FCC for a license. This application is checked by the FCC and AAR frequency coordination committee before being granted.

2. Have within the Railroad Book of Operating Rules a special section on radio. Those using the radio must be examined every two years on the Radio Rules.

3. Test and record measurements made on each radio unit at a maximum of one year intervals as governed by the FCC rules.

In the late 1930's, a system of train communications, Inductive Train Communication, was developed by US&S. This system used a low frequency (below 150 KHz) and had the advantage of not requiring an FCC license. The system used the telephone and telegraph wires as its means to complete the inductive circuit between caboose and locomotive, or train and wayside station. This type of system was continued in use on the Pennsylvania Railroad until 1966; it was then replaced with VHF radio.

Another "radio type" system in use today, and currently

US&S DIV. WABCO - SWISSVALE, PA. ALL RIGHTS RESERVED

gaining popularity with rapid transit systems, is that using Power Carrier. At US&S we call this system "Trainphone". The Trainphone has an R.F. power of 30 to 40 watts in the 100 KHz range. The R.F. is coupled to the high voltage power traction circuit for transmission between mobile and wayside station transceiver units. Trainphone type circuits also have the advantage of not requiring FCC license and regulations. They have the advantage of being a private communication system.

Use of VHF Radio vs Trainphone is dependent upon many factors which include: VHF channel availability; subway vs above ground operation; physical transmission circuits available; actual and potential off right-of-way transmitting and receiving locations; etc.

Microwave

Another communication system gaining popularity on the railroads is the Microwave Radio Relay System. These microwave radio systems employ frequencies in the SHF range (3,000 to 30,000 MHz) and up.

The use of the frequency modulated microwave radio system is widely recognized as a flexible, reliable means of providing point-to-point communications. When used with appropriate multiplex equipment, the system can carry from a few circuits to a large number of telephone, telegraph, and data circuits. Microwave can also be arranged to carry wide band circuits such as high speed data, facsimile, music, and television.

Microwave radio energy travels in relatively straight lines. It is focused in narrow beams by high gain antennas and exhibits some of the properties of a beam of light.

Microwave radio beams are subject to obstruction and attenuation by solid objects within the line-of-sight path between antennas. They are also subject to reflections and refractions.

As the railroads reduce their pole line requirements, microwave requirements increase. At the same time communication circuit capabilities increase and system failures due to storms, etc., decrease.

Summary

Railroads and Rapid Transit operations are continually improving and increasing their communication requirements. Many new systems are proven on railroad properties.

During the past few years, many signaling and train control contracts have also included one or more communication systems.

US&S is presently in the voice communication business with

US&S DIV. WABCO - SWISSVALE, PA. ALL RIGHTS RESERVED

a VHF radio product line manufactured at the Batesburg, South Carolina, plant and custom design Trainphone systems manufactured at the Swissvale, Pennsylvania plant.

US&S DIV. WABCO - SWISSVALE, PA. ALL RIGHTS RESERVED

ASSOCIATION OF AMERICAN RAILROADS

FREQUENCY ASSIGNMENT PLAN

I - Frequencies in the 150-162 MHz band; also the pairs 452.90/457.90 and 452.95/457.95 MHz.

Frequencies in megacycles per second (now designated MegaHertz - MHz) corresponding to the channel numbers are shown on each page of the Assignment Plan. The railroad allocation in the 150-162 MHz band is now 160.215 to 161.565 MHz, inclusive. This assignment is composed of 45 frequencies (termed primary and secondary) which, under FCC Rules are intended for assignment in the same geographical area, and 46 tertiary frequencies which presently can be assigned under conditions which will not interfere with stations operating on the primary and secondary frequencies. In this plan the first-mentioned group is numbered 1 through 45 and the second-mentioned group 1T through 46T. The Railroad allocation in the 450-460 MHz band consists of two pairs as shown above, numbered 47, 47m, 48 and 48m (m = mobile only, as provided by FCC Rules).

This Frequency Assignment Plan was prepared by the Communication and Signal Section, AAR, from data furnished by the Railroads. The Plan includes assignments in two main categories, Train and General. A brief discussion of these categories is given below.

Train (EE-PT) - This category covers assignments for all radio stations, Base or Mobile, which are used for communication with or on trains. Where such stations are also used - intermittently - for radio communication in connection with yard and terminal operation, the "Train" classification still applies and should be entered in Item 4 (a) of FCC Form 400 following the name of the Radio Service, for example "Railroad (Train)." The train assignments are shown in this Plan as EE for End-to-End and PT for Point-to-Train, the former for communication between the ends of a long train and the latter from wayside station to train. The assignment of a frequency for one or the other of these classifications does not rigidly restrict its use to that classification only. Some railroads, having a small number of radio-equipped trains, will find it more convenient to use one frequency for both EE and PT communication. In fact, some railroads also use the same frequency for some general communications. The principal distinctions of the "Train" category, therefore, are that it is (1) an assignment which is normally for use anywhere on the lines of the railroad to which assigned, (2) is normally not reassigned within 75 miles of that railroad and (3) is intended primarily for classification of communications presently described in Section 93.352 (a) of FCC Rules and Regulations governing the Railroad Radio Service (Subpart H, Part 93). It may be noted that a degree of priority is accorded this "Train" classification of frequencies over those used for other classifications - see Section 93.357 (a), FCC Rules. Normally only one frequency is assigned a railroad for EE service and one for PT service.

General (G) - Any frequency assigned in this Plan for use exclusively in other than Train service is designated as "G" - General Service. Such assignments are sometimes

designated "ES"-Entire System, or they may be limited to the vicinity of a city, an area or a state. Such limitations are to avoid interference and promote maximum use of each of the frequencies allocated for railroad use.

Mobile Relay (MR) - Where a railroad indicates that a requested frequency is to be limited to relay service (per Section 93.355, FCC Rules) it may be designated "MR". Such assignments are often used at greater-than-normal elevations, hence may have a greater potential interference range. The designator "MR" serves as a reminder of this possibility. Although desirable that frequencies intended for relay service at high elevations be designated "MR" in this Assignment Plan the use of other assigned frequencies for relay operations is permissible.

Areas - Since there has been some difficulty in the past in determining the limits of an "Area" assignment, Areas have been specified as including a County Area or including the Area enclosed by geographical coordinates as specified. In most cases, such Areas have separate listing of assignments and in such cases, the limits of the Areas are shown at the top of the assignment sheet pertaining thereto. All Areas to which references are made are listed on page 32060.9.

Restrictive clauses - In the interest of promoting maximum utilization of frequencies, particularly in congested areas such as Chicago, Kansas City, St. Louis, etc., it may be necessary to add a restrictive radiation or directional antenna clause to some assignments in the General category.

U. S. - Canadian coordination - By agreement with Canadian railroads, U.S. railroads in the Canadian border area have been assigned primary and secondary frequencies only. The Canadian railroads have utilized tertiary frequencies for their assignments in this area. Thus a 15 kHz offset is provided between the carrier frequencies used by U. S. and Canadian railroads and in most cases, this frequency separation will be sufficient to eliminate mutual interference when both parties utilize narrow channel transmitters and receivers. In some cases, it has been necessary to attach additional restrictions to U. S. assignments which are adjacent to certain Canadian assignments which are underlined in the Canadian Railroads Assignment Plan. The Canadian railroads in turn will take appropriate measures to protect U. S. Railroad Radio stations operating on primary and secondary frequencies which are not adjacent to underlined tertiary frequencies.

II - Other Frequency Bands

In addition to the allocation in the 150-162 and the 450 MHz bands, railroads are permitted the use of frequencies in various bands between 27 MHz and 30,000 MHz subject to the conditions specified in Sections 93.352, 93.353, 93.356 and 93.357 of FCC Rules. No assignments of these frequencies have been made in this Plan. If use of any of these frequencies is desired, application for appropriate authorization should be filed in accordance with the applicable FCC Rules. Microwave frequencies which are available for assignment are listed in Section 93.112, while certain frequencies which are available for developmental operation are listed in Section 93.204. Advice on particular problems in selection of a frequency for a specific use may be requested from the Engineer, Communications and Signals.

PITTSBURGH, PENNSYLVANIA AREA

Pittsburgh Area = Area within 79° 45' W to 80° 20' W and 40° 15' N to 40° 45' N

Channels No.	Channels MHz	
1T	160.215	PRR-G, Conway Yd., Conway, Pa.(1)
1	160.230	BO-EE
2T	160.245	PRR-G, Conway Yd., Conway, Pa.(1)
2	160.260	URR-PT
3T	160.275	PRR-G, ES in Pittsburgh Area
3	160.290	PRR-G, Allegheny Co., Pa.(6-BO)
4T	160.305	PRR-G, Conway Yd., Conway, Pa.(1)
4	160.320	BO-G, ES
5T	160.335	NYC & PLE-G, Mc Kees Rocks (1)
5	160.350	URR-EE
6T	160.365	PRR-G, Conway Yd., Conway, Pa.(1)
6	160.380	NW-G, Allegheny, Fayette, Washington & Westmoreland Cos. Pa.
7T	160.395	
7	160.410	NYC & PLE-G, Pittsburgh Area
8T	160.425	
8	160.440	MKC-G, McKeesport, Pa.
9T	160.455	PRR-G, Conway Yd., Conway, Pa.(1)
9	160.470	PRR-G, ES in Allegheny & Beaver Cos., Pa.
10T	160.485	
10	160.500	URR-G, ES (6-WM)
11T	160.515	
11	160.530	BO-PT
12T	160.545	PRR-G, Conway Yd., Conway, Pa.(1)
12	160.560	PRR-G, ES except Chicago & St. Louis Areas*
13T	160.575	
13	160.590	PRR-G, ES in Allegheny, Beaver, Washington & Westmoreland Cos., Pa.
14T	160.605	
14	160.620	URR-G, ES (6-MSW)
15T	160.635	
15	160.650	NYC & PLE-G, Pittsburgh Area
16T	160.665	PRR-G, ES in Pittsburgh, Pa. Area (1)
16	160.680	RYEA-G, ES in Pa.
17T	160.695	
17	160.710	PRR-EE
18T	160.725	
18	160.740	PRR-G, Pittsburgh Area
19T	160.755	PRR-G, Conway Yd., Conway, Pa.(1)
19	160.770	
20T	160.785	
20	160.800	PRR-PT
21T	160.815	
21	160.830	BLE-EE
22T	160.845	
22	160.860	NYC & PLE-G, ES in Pa.
23T	160.875	
23	160.890	NYC & PLE-G, ES in Pa.
24T	160.905	
24	160.920	NYC & PLE-G, Pittsburgh Area

All footnotes are listed in General Section of FAP.

* See "Areas" in General Section of FAP.

PITTSBURGH, PENNSYLVANIA AREA

Pittsburgh Area = Area within 79° 45' W to 80° 20' W and 40° 15' N to 40° 45' N

Channels No.	Channels MHz	
25T	160.935	BO-CNJ-NW-RDG-WM---EE (1) (3)
25	160.950	PRR-G, ES in Allegheny & Beaver Cos., Pa.
26T	160.965	
26	160.980	NYC & PLE-G, ES
27T	160.995	NYC & PLE-G, ES (1)
27	161.010	ALQS-EE
28T	161.025	
28	161.040	NW-G, Allegheny, Fayette, Washington & Westmoreland Cos., Pa.
29T	161.055	NYC & PLE-G, ES (1)
29	161.070	NYC & PLE-EE
30T	161.085	PRR-G, ES in Pa. (1) (3)
30	161.100	NW-G, Allegheny, Fayette, Washington & Westmoreland Cos., Pa.
31T	161.115	PRR-G, Conway Yd., Conway, Pa.
31	161.130	NYC & PLE-PT
32T	161.145	
32	161.160	PRR-G, ES in Allegheny, Beaver & Washington Cos., Pa.
33T	161.175	
33	161.190	PRR-G, ES in Allegheny & Beaver Cos., Pa.
34T	161.205	
34	161.220	MGAC-G, Pittsburgh / BLE-G, ES
35T	161.235	
35	161.250	ALQS-G, ES
36T	161.265	
36	161.280	PRR-G, Conway Yd., Conway, Pa.
37T	161.295	
37	161.310	BLE-PT
38T	161.325	PRR-G, ES in Pittsburgh Area (1)
38	161.340	NYC & PLE-G, ES in Pa.
39T	161.355	PRR-G, Conway Yd., Conway, Pa. (1)
39	161.370	POV-G, Neville Is., Pittsburgh Area
40T	161.385	
40	161.400	MGAC-EE
41T	161.415	
41	161.430	PRR-G, ES in Pa.
42T	161.445	PRR-G, Conway Yd., Conway, Pa. (1)
42	161.460	PRR-G, Allegheny Co., Pa. (6-WM)
43T	161.475	PRR-G, Conway Yd., Conway, Pa. (1)
43	161.490	ALQS-EE
44T	161.505	
44	161.520	NW-G, Allegheny, Fayette, Washington & Westmoreland Cos., Pa.
45T	161.535	PRR-G, Conway Yd.; Pittsburgh Stn. Yd.; Pitcairn Yd., Pa. (1)
45	161.550	URR-G, Pittsburgh Area
46T	161.565	PRR-G, Conway Yd., Conway, Pa. (1)
47	452.90	
47m	457.90	
48	452.95	NW-G, Pittsburgh Area
48m	457.95	NW-G, Pittsburgh Area

All footnotes are listed in General Section of FAP.

PRINCIPLES OF RAILROAD OPERATION AND RAILWAY SIGNALING

CHAPTER XVII REMOTE CONTROL OF VEHICLES

GENERAL

There are two basic reasons for remote control of vehicles used in industry today - safety and economy. Examples of safety applications are moving hot ladle cars in steel mills, and controlling U.S. Army jeeps used in clearing mine fields. Although the U.S. & S. Division has supplied only two sets of such equipment to the Army, it proves the application of remote control from a safety standpoint.

Industry is continually attempting to reduce the number of personnel doing routine jobs - automation is an attractive method. One application is to remotely control small locomotives; then one man can operate a train where previous requirements were for two or three man crews.

This discussion will include the signals as received on the locomotive and how these signals are actually executed. The modifications of the locomotive, to enable its acceptance of commands as received from the remote operator, will also be covered.

There are several different classes of locomotives. The locomotive manufacturers have chosen to designate locomotives by tonnage up to eighty tons; heavier models are classified according to horsepower. Most of our applications have been on smaller switching locomotives in the range of twenty-five to eighty tons. These small locomotives present their own problems; one being insufficient space in the cab to mount the equipment. Then our construction department must mount the equipment boxes some place on the outside of the locomotive.

The command in the RCS -20 type of remote control are transmitted by a space radio using F.M. modulation in the 72-76 or 150-160 Mc. bands. The transmitter is housed (with the tone oscillators, battery, and control switches) in a portable belt pack; there is also a handpiece that contains four of the control switches. The four control switches on the handpiece are: (1) deadman; (2) brake-locomotive only; (3) throttle advance; and (4) throttle retard. The portable belt pack contains the remaining control functions: (1) direction - forward and reverse; (2) sand; (3) uncouple; (4) horn, etc. Sand, uncouple, horn, bell and other functions are options which the customer may request.

The radio receiver is housed in the vehicle control box along with the tone receivers and logic relays. In tracing the signal flow through the system, the belt pack sends a command signal to the receiver which demodulates the command signal and

 ALL RIGHTS RESERVED

feeds the commands to the tone receivers. They, in turn, receive their respective frequencies and produce an output in the form of a contact closure. This contact closure then energizes the proper interposer relay, through appropriate logic, which checks for conflicting or unsafe commands. Thus, using the contacts on these interposer relays, the control circuits or solenoid valves are energized to perform the necessary functions.

OPERATIONAL PROCEDURES

Direction

The locomotive must be commanded to go forward or reverse. Locomotives larger than forty-five tons often have an electro-pneumatic reverser supplied by the manufacturer. This is a reversing mechanism that is actually thrown by air cylinders; the directional control lever on the locomotive operator's stand is an electrical control.

Figure I shows a typical example of the locomotive circuitry that is submitted for remote control. The forward and reverse directions are selected by the forward and reverse lever on the control stand; this causes energy to be delivered to either the forward or the reverse solenoid coils. These coils activate the forward or reverse cylinders which are pneumatically driven into position. The cylinders then cause the tractive power to be applied in the proper direction through gear coupling. In this case, it is a simple matter to add a remote control system to deactivate the manual control delivery of energy to the existing solenoid valves.

A lock coil, which is an electro-magnet, holds the reverser in either forward or reverse when the throttle is advanced from idle. This is activated by one of the switches which are connected to the throttle lever. These throttle connected switches also serve other functions, including the elimination of tractive effort when the throttle lever is in the idle position. We can bypass the manual controls and deliver our forward and reverse signals directly to the solenoid coils from our interposer.

Smaller locomotives (under forty-five tons) are not equipped with solenoid valves; the operator will actually move the reversing contact with the lever. This presents an additional application problem; operating these reverser contacts remotely. The present method is to install a supplementary pneumatic cylinder, connect the cylinder to the reversing shaft, and put a solenoid valve to deliver air to either end of the cylinder. If the operator wishes to go forward, he energizes the solenoid valve connected on the forward end of the reversing cylinder; this would actually throw the reverser. It then becomes necessary to provide the same type of interlock as found on the larger locomotives. Pressure switches are used to prevent a

US&S DIV. WABCO - SWISSVALE, PA. ALL RIGHTS RESERVED

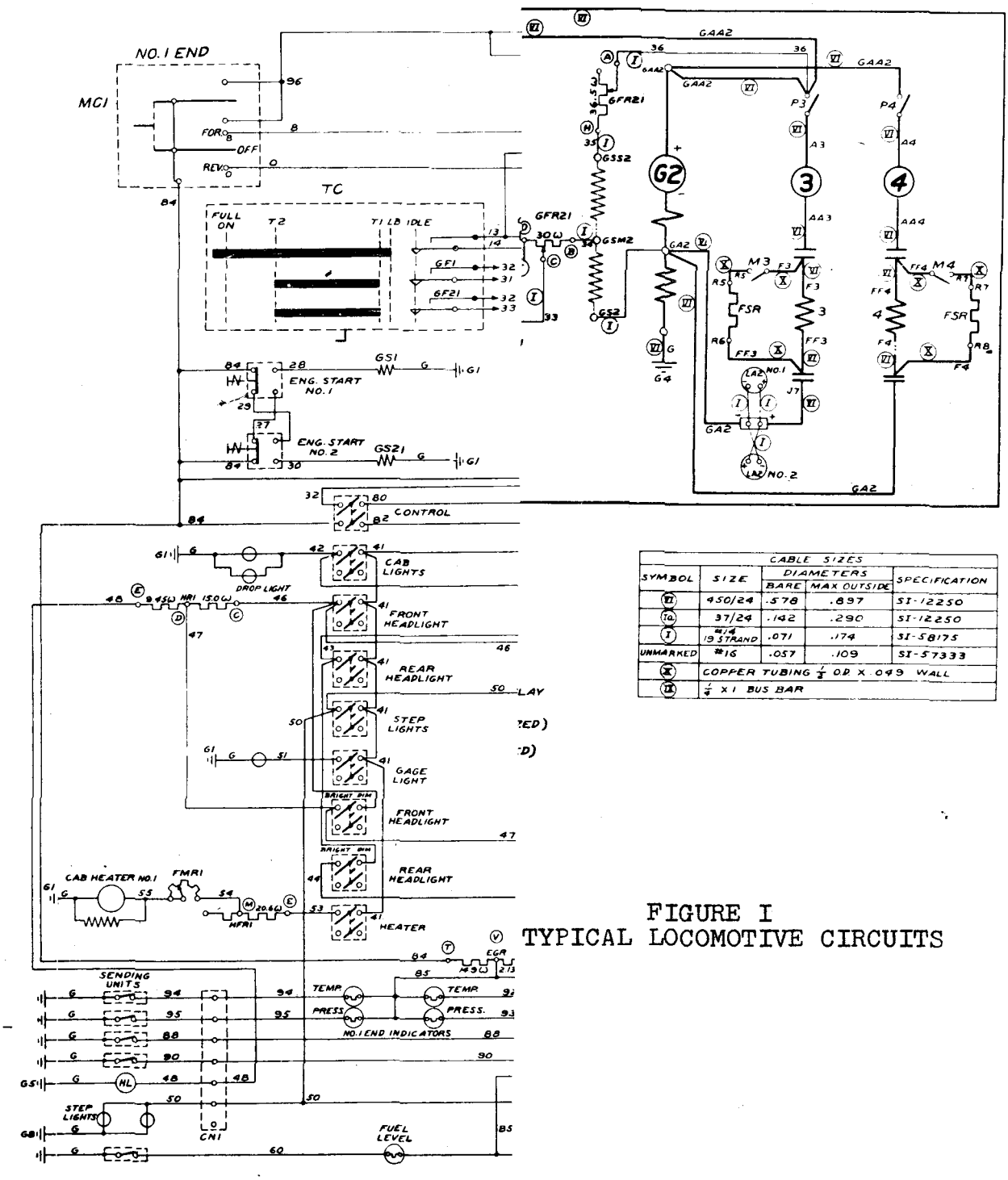

CABLE SIZES				
SYMBOL	SIZE	DIAMETERS		SPECIFICATION
		BARE	MAX OUTSIDE	
VI	450/24	.578	.897	SI-12250
10	37/24	.142	.290	SI-12250
I	#14 19 STRAND	.071	.174	SI-58175
UNMARKED	#16	.057	.109	SI-57333
X	COPPER TUBING $\frac{1}{4}$ O.D. X .049 WALL			
IX	$\frac{1}{4}$ X 1 BUS BAR			

FIGURE I
TYPICAL LOCOMOTIVE CIRCUITS

change of direction when the throttle is out of idle.

Thus, there are only the two basic types of direction-change mechanisms. In one instance, the locomotive is already equipped with the electro-pneumatic valve; the other case requires this as an addition.

THROTTLE CONTROL

There are, essentially, three different types of throttles in use on locomotives with no criteria relating the type installed to the size of the locomotive. Locomotives that range from 25 to 45 tons will have a direct mechanical linkage between the throttle handle on the control stand and the governors on the diesels. Those weighing above 80 tons will probably be equipped with a pneumatically operated throttle. The larger road service locomotives will definitely have an electric throttle. The electric throttle most easily lends itself to multiple unit operation that is controlled by the leading unit.

The mechanical throttle linkage is found most often on the locomotives bearing our conversion units. There is considerable adapting necessary to remove the mechanical linkage between the throttle handle and the governor arms. Then pneumatically operated actuators and a control valve replace the original throttle and throttle handle. The control air valve delivers pressure to the operator which is proportional to the advance of the handle (if it were being manually operated). By the addition of two valves, the throttle retard and the throttle advance, and some other modifications, air can be admitted into the throttle operator from the remotely controlled solenoid valves. This, in effect, converts the mechanical throttle control into an electro-pneumatic throttle. The main reservoir will furnish the air through a reducing valve which will bring the pressure down to 60 p.s.i. at the "in" port of the control air valve and at the entrance to the floreg valve. Proportional pressure will be delivered out, through this shuttle valve, to the operator; greater pressures on the operator cause the arm to move further. This shuttle valve is used to deliver air to the same device from two different sources.

For remote operation of this operator, there is still the throttle-retard and the throttle-advance. These are activated by solenoid valves which are energized from the communication link and its associated relay logic. As the coil is energized the poppet valve diaphragm will move downward and away. In normal operation the throttle-retard valve is closed; any air that happens to be in this pipe could not escape. To advance the throttle and speed up the diesels, the throttle-advance receives energy and the throttle valve would open. This would permit air to flow from the reducing valve through the floreg (flow regulation) valve and the throttle advance valve (which is now open); the resulting pressure increase on the operator

US&S DIV. WABCO - SWISSVALE, PA. ALL RIGHTS RESERVED

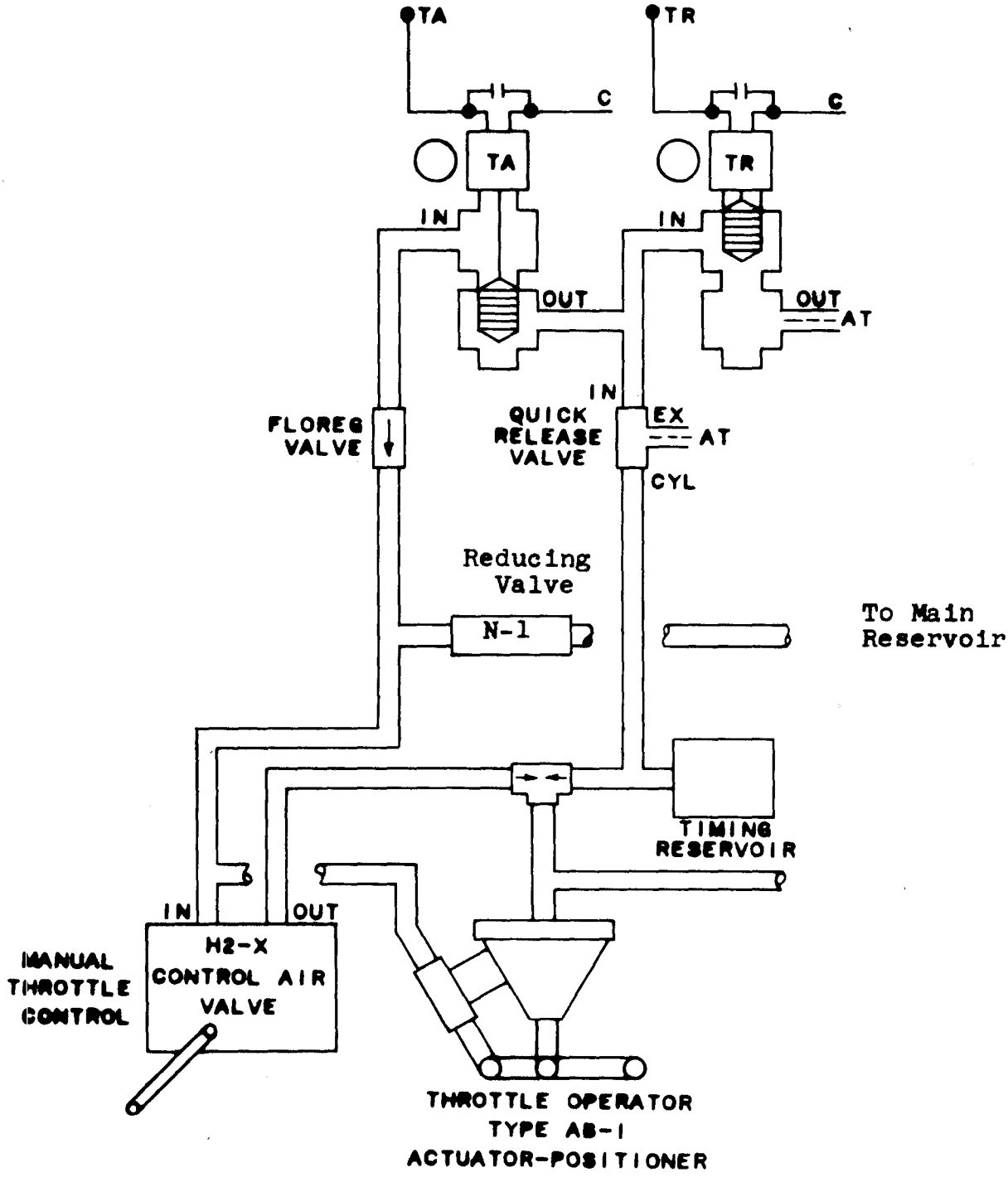

Figure II.
Throttle Control Arrangement

would increase the speed. When energy is removed from the throttle-advance valve, it will close. Any air that had been admitted to the operator will be trapped, thus retaining whatever speed the diesel had reached when the throttle-advance was de-energized. To retard the throttle or reduce engine speed, energy is removed by the throttle-retard valve. This diaphragm moves upward, opens an exhaust path through the valve to atmosphere and the throttle returns to idle.

This is an uncomplicated apparatus consisting of two valves; one is normally-open and one is normally-closed. The reason that the throttle-retard is a normally-open valve reflects the closed-circuit principle; any failure of energy will de-energize the valve and exhaust the air. If the throttle retard were a two-way valve, normally-closed, a power failure would cause the locomotive to continue rolling uncontrolled. The throttle advance valve can only increase, or maintain, engine speed; speed reduction must occur by other means. The throttle-retard is normally energized; to retard the throttle, energy interruption causes opening.

In remote operation, air passes through a reduction valve and floreg valve to the operator. If the floreg valve was not there, this system could be made to work - but it would be extremely time sensitive. The pressure increase that is delivered to the operator is a function of how long the throttle-advance valve is energized. The addition of the floreg valve reduces the pressure increase from a blast to a stream. This floreg valve is adjustable, much like an adjustable choke. The addition of a timing reservoir will dampen the flow of air as it enters the operator. This 110 cubic inch reservoir will accomodate a large portion of the volume added by the stream flow and cause a slower system pressure increase. These modifications produce a very smooth and gradual acceleration of the diesels during manual or remote operations.

There is one distinct disadvantage to adding both the floreg valve and the timing reservoir. A finite time period is required to exhaust the air from the throttle operator and return to idle. A quick-release valve can be added between the floreg and throttle control valves, and the timing reservoir. The line pressure decrease, between the quick-release valve and the throttle-retard valve, causes the quick-release valve to open. The moment that the quick-release valve is opened, air is reversed through a large capacity "exhaust" port that is opened in the valve. This will exhaust the air from the timing reservoir very quickly. Hence, when the throttle-retard is requested, the condition develops faster than the diesel itself can return to idle. There is no time lag because the line pressure loss between the throttle valves and the quick-release valve causes an immediate dumping of the timing reservoir and operator air to atmospheric pressure.

US&S DIV. WABCO - SWISSVALE, PA. ALL RIGHTS RESERVED

Some locomotives come from the locomotive builders with a control air valve operator as standard equipment. To remotely control installations that already have pneumatic throttles available, the modifications are less involved. They include the addition of: the shuttle valve which will permit delivery of air during manual or remote operation; a floreg valve; the throttle control valves; the quick-release valve; and the timing reservoir.

The electric throttle is a drum type switch with nine positions; idle and notches one through eight. Associated with this drum switch are four solenoid valves on the governor. These are energized in various sequences to provide seven different and discrete diesel speeds. Notch one does nothing but energizes the main generator exciter field; the locomotive would crawl if it wasn't heavily loaded. In an electric throttle notch one does not speed up the diesel; however, progressing from notch two through notch eight will increase the engine speeds.

To remotely control an electric throttle, it is necessary to provide suitable relay logic. A counting chain or stepper switch must deliver the same energy sequence to the same wires as if a man in the cab actually moved the throttle back to the various notches.

BRAKE OPERATION

The most important feature of remote control is the application of the brakes. This is not intended for main line, or train, types of brake control; the control only applies to the locomotive brakes. There are two change-over valves (CO-1 and CO-2) which control the passage of air into the remote braking subsystem. Figure III. shows the (normally-closed) CO-2 which prevents flow from the manual lines during remote brake applications. Figure IV. shows the (normally-open) CO-1, which keeps brake release pressure in the remote operation. Both the brake application (APP) and emergency stop (ES) valves are three-way and normally-open. A loss of electrical power or a release of the "dead man" would cause a brake application.

The air pressure used to operate the locomotive braking subsystem is reduced to 45 p.s.i. for either manual or remote operation. As in the previously described subsystems, the various brake valves are all actuated by solenoids. A tone actuating either the APP or the ES valves to the open position will apply the brakes. However, the APP valve can be opened intermittently to drag the brakes (followed by a subsequent pressure buildup and release) during remote operation, while the ES valve release will cause an air dump to atmosphere - and a full brake application. A two-way shuttle valve is located between the APP and ES valves and

US&S DIV. WABCO - SWISSVALE, PA. ALL RIGHTS RESERVED

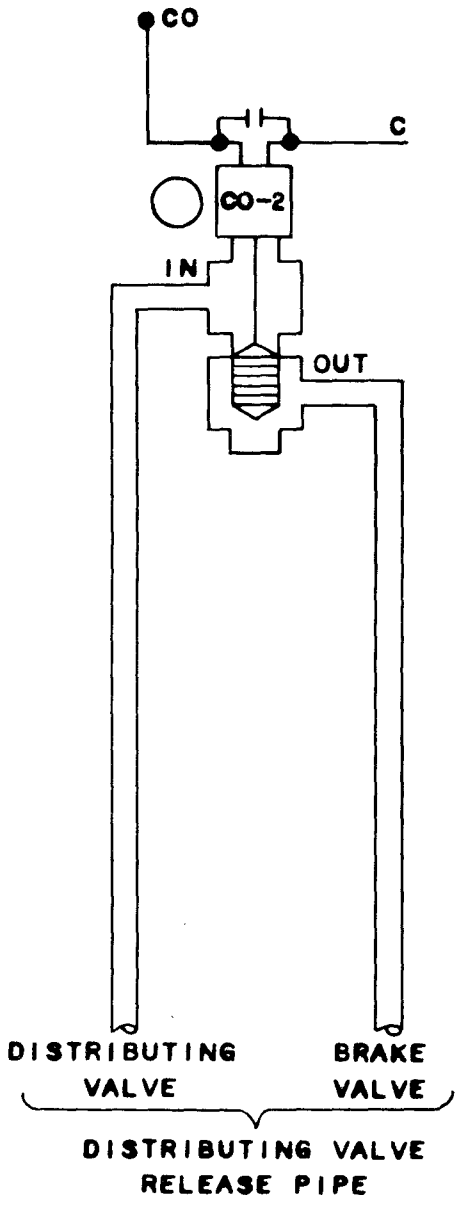

FIGURE 111
MANUAL CHANGEOVER VALVE

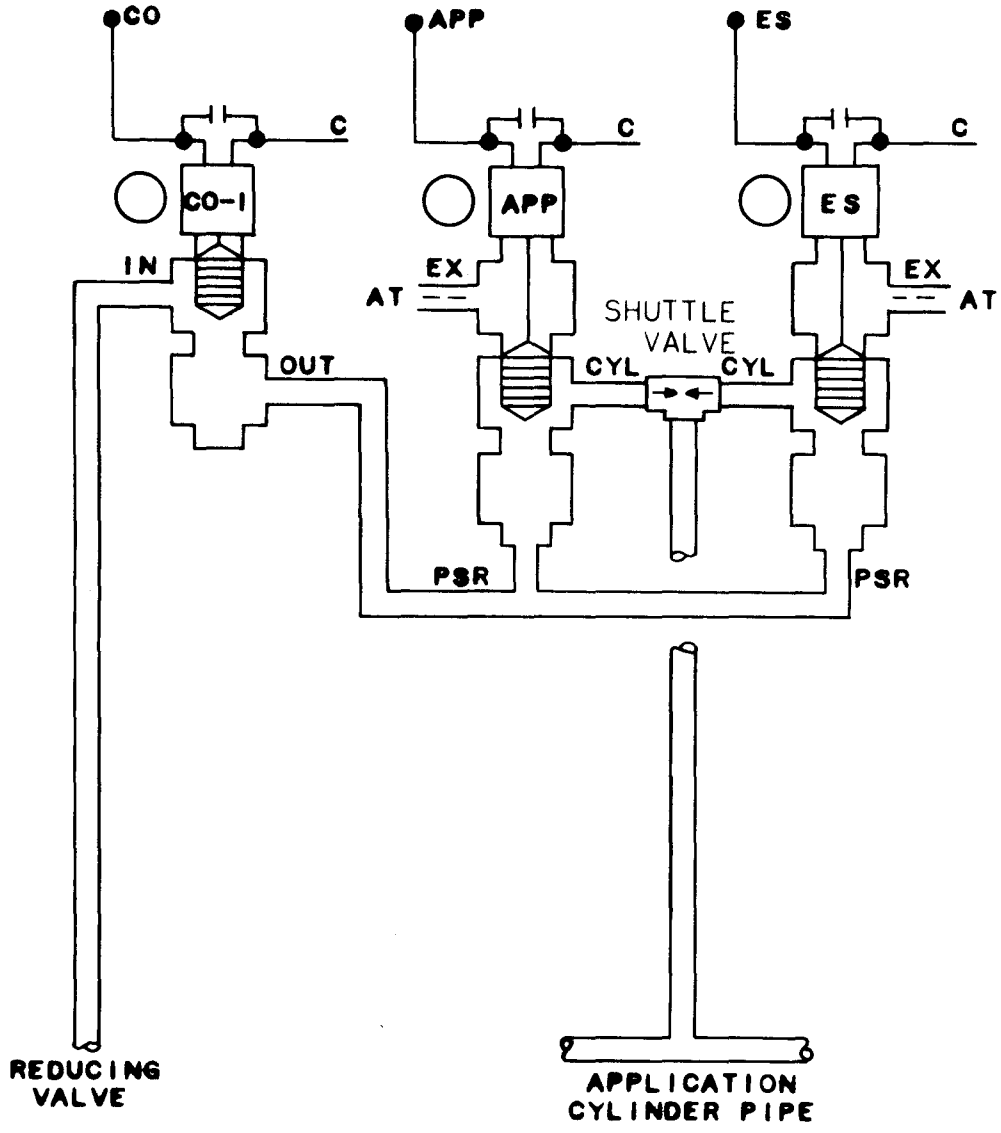

FIGURE IV
REMOTE CHANGEOVER VALVE AND
REMOTE BRAKING VALVES

the application pipe; this prevents blow-by and allows a brake release when air re-enters after a brake operation.

ANCILLARY OPERATIONS

Into this category would fall such items as bell ringing, horn blowing, and sanding.

The horn and bell operations are quite similar. A bell ringing subsystem is shown in Figure V. The air line, between the main reservoir and the existing bell valve, is tapped and bypassed for remote operation. A normally-closed solenoid valve releases air to the bell when actuated remotely; manual operation of the handle, on the stand, would cause sounding or shut off the air from that side.

The sanding operation (Figure VI.) is controlled by a single button during remote operation. This requires the use of both the solenoid valves (for front or rear wheels) and relay logic for directional decisions. Because the locomotive must move onto the sand to make this operation effective, the "relative" front end sanders must be applied. Three position, normally-closed valves are used to make clean pressure applications, thereby preventing the sand from laying in the lines - and ultimately clogging them.

US&S DIV. WABCO - SWISSVALE, PA. ALL RIGHTS RESERVED

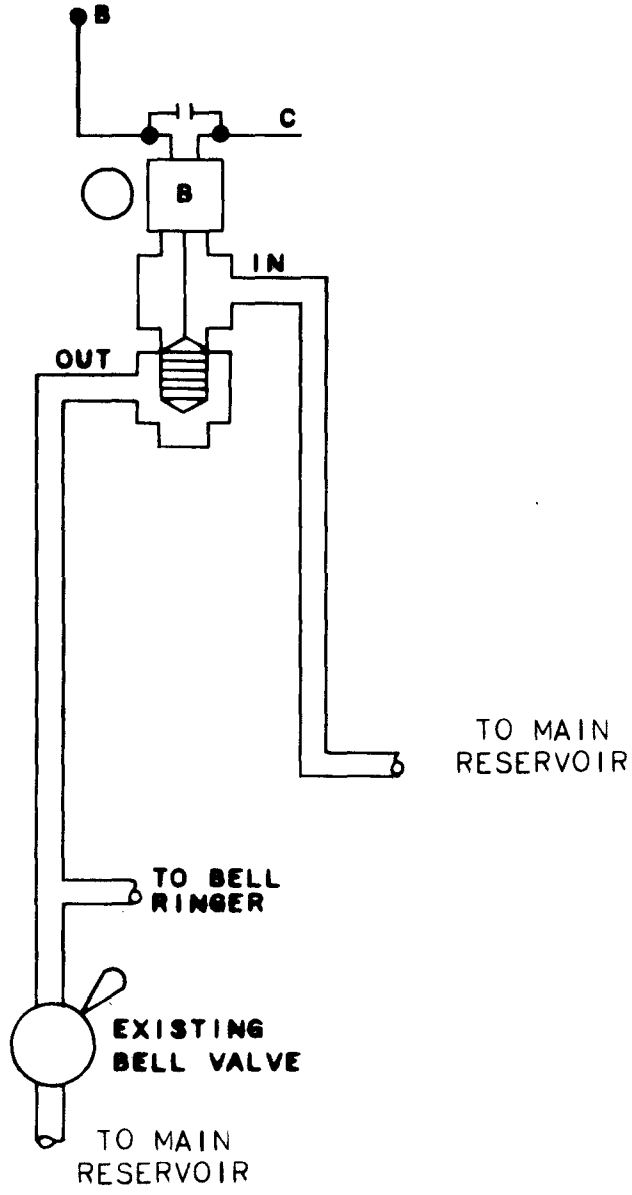

FIGURE V
BELL RINGING VALVE

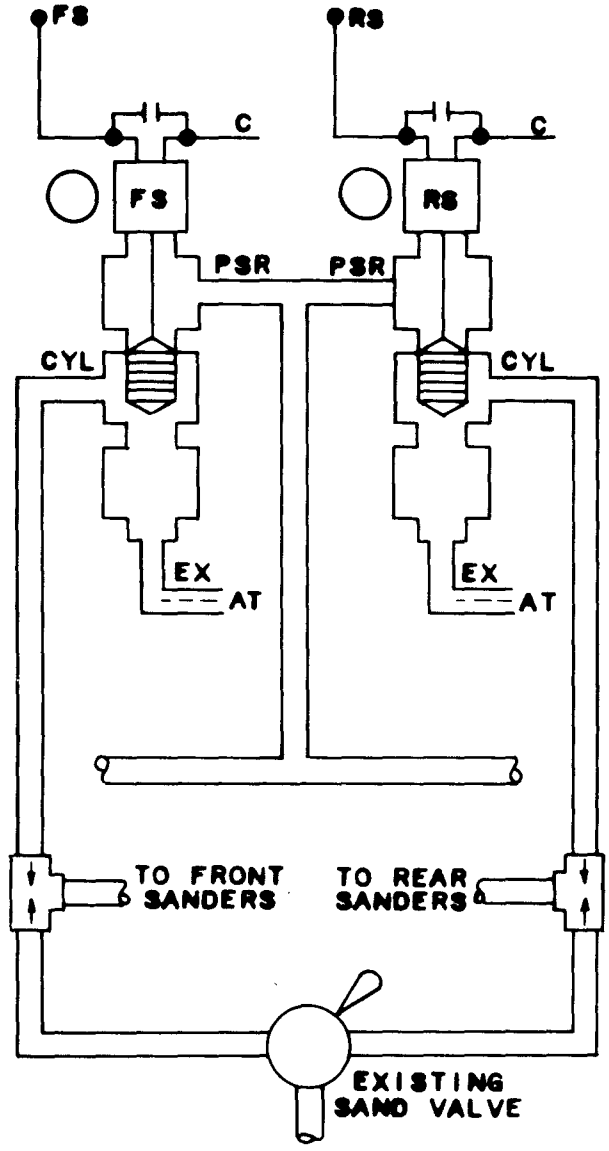

FIGURE VI
SANDING VALVES

PRINCIPLES OF RAILROAD OPERATION AND RAILWAY SIGNALING

CHAPTER XVIII - REMOTE MULTIPLE UNIT CONTROL

GENERAL

The railroads' major source of revenue is freight. They are attempting to find methods of reducing the cost of operation by moving longer trains, faster. The Remote Multiple Unit Control (RMUC) System assists in this accomplishment.

To haul more tonnage, the total pulling horsepower can be increased to any given amount by adding more units to the locomotive consist at the head end of the train. This increase, however, quickly reaches a practical limit which depends on the amount of pull which will break drawbars and knuckles.

As a train becomes longer, the amount of slack becomes greater. This slack, which can amount to more than 50 feet on a long train, poses one of the chief operational problems on long trains.

A third factor which limits the number of cars in a train is the air brake system. The air for the entire train is normally supplied from the front. Due to leaks in the brake lines at the connections between cars, it becomes more difficult to maintain a safe pressure near the end of very long trains.

The brakes on each car are applied by the reduction of pressure in the brake line. On longer trains, this "apply" signal takes more time to apply the brakes at the end of the train.

The use of a remote unit, that is a helper locomotive located some distance behind the front end, provides a means for improving the operation of long trains. This remote unit can consist of one or more locomotives.

The following improvements in operation are obtained:

(1) The drawbar pull is reduced.

(2) With proper operation, the control of the slack will cause smoother train handling.

(3) The air is supplied from two points in the train providing a significantly improved air pressure gradient.

(4) The response of the whole braking system is improved because the "brake apply" signals are transmitted from two points in the train.

 ALL RIGHTS RESERVED

SYSTEM DESCRIPTION

The RMUC System provides a method of automatically controlling the helper locomotive(s) from the lead locomotive. The RMUC System consists of the following equipment:

(1) Indication and Control Console. This unit is located on the engine control console of the lead unit and displays the status indications of the remote unit. It also contains the switches for selecting remote unit's mode of operation.

(2) Brake Control Console. When the RMUC equipment is in operation, the control of the air brakes on both the remote and the lead units are controlled from push buttons on this unit. This supplants the standard brake stand.

(3) Function Selector Units. The units provide for proper sequencing of the various control functions and provide the interface between the coding unit and the locomotive control circuits.

(4) The Code Unit. This provides the data link between the lead and remote units, and is U.S. & S. Division's main contribution to the system.

The transmission is accomplished by means of a radio link between a coding unit on the lead locomotive and a coding unit on the remote (helper) locomotive. Controls are initiated on the lead unit. These controls are encoded and transmitted to the remote unit, where the message is decoded. A signal to activate a particular control function is then fed to the helper locomotive control circuits.

After each control message is received at the remote unit, this unit initiates an indication message. This message contains the indication of the status of the controls on the remote unit. Several alarm functions (hot engine, low oil, etc.) can also be indicated. A change in any of the indicated functions on the remote unit will also initiate a transmission of this indication message.

The method of transmission used is a time code. The information will determine the length of each pulse in the sequence of pulses which make up the message. The location of each pulse within the sequence of pulses determines which information bit is being characterized. Three different lengths of pulses are

US&S DIV. WABCO - SWISSVALE, PA. ALL RIGHTS RESERVED

used: 1 millisecond; 2 milliseconds; and 3 milliseconds. The 1 millisecond and 2 millisecond pulses are used to transmit ZERO and ONE (or open and closed contacts) respectively. The 3 millisecond pulse is used only at the beginning of each transmission. It is a unique starting pulse and starts the count for all successive bits.

The first four bits of each message contain the address of the locomotive transmitting the message. The only locomotive which can receive and act on this message is the one with the same address. Sixteen different addresses can be characterized with this four-bit address.

The reliability of this system is enhanced by a form of message checking - complementary redundancy. Each bit in the message is sent twice with the second transmission the opposite of the first. This is done in blocks of 8 bits; these are called frames. After it is given a signal to start transmission, the transmitter portion of the system operates in the following manner:

(1) Check that the channel is clear.

(2) Turn on the transmitter putting out a series of 1 millisecond pulses. (This is to provide time for transmitter and receiver transients.)

(3) Transmit the 3 millisecond synchronizing bit.

(4) Transmit the first 8 bits (the first 4 bits contain the address).

(5) Transmit the 8 bit complement message.

(6) Energize the common buss for the first 8 bits of information.

(7) Load this information into transmit register.

(8) Transmit the data which had been loaded into the transmit register, then transmit the complement ofthis data.

(9) Repeat steps 6, 7, and 8 until all of the information frames have been transferred.

(10) Hold the transmitter at zero for a short period of time then turn off transmitter (this prevents transients which occur at the receiver).

When a signal is recognized, the receive portion of the system performs the following sequence:

US&S DIV. WABCO - SWISSVALE, PA. ALL RIGHTS RESERVED

(1) Wait for a 3 millisecond synchronizing pulse.

(2) Receive the first 8 bits.

(3) Receive the second 8 bits and check against the first 8 bits.

(4) Determine if the correct address is in the first 4 bits of this first frame. (No actual data is contained in this first frame).

(5) Receive the second frame consisting of 8 data bits and 8 complement bits. (Check complement.)

(6) Store in the buffer register (flip-flop).

(7) Transfer data from the buffer register into the magnetic stick relays.

(8) Receive remaining frames of data in the same manner.

(9) When the correct number of data frames has been received, check for more incoming data.

(10) Indicate the correct reception.

In conjunction with the function of transmission of controls and indications, the system is capable of several associated functions. These are concerned with producting acceptable operation during the periods of time when radio communication is interrupted, and with the proper operation of the air brakes.

The system contains a checking feature which automatically checks the communication link every 20 seconds. This is insurance that any command which could have been initiated is getting through. The operation of this checking feature is as follows. After 20 seconds have elapsed, the lead unit initiates a command message containing the present status of all control functions. If the lead unit then receives an indication message, the communications link is assumed to be intact. A correct reply must be received within 25 seconds, or a Preliminary Loss Of Continuity Condition is said to exist. During the loss of continuity condition, the master initiates a transmission every 0.6 seconds until continuity is re-established. If 45 seconds elapses after the last good message was received, a Loss Of Continuity Condition is said to exist. During a loss of continuity condition, a control signal is delivered to the remote unit engine control circuits. This will cause the remote unit to shut down if the train brakes are applied. During the Preliminary Loss Of Continuity Mode, the radio transmitter and

US&S DIV. WABCO - SWISSVALE, PA. ALL RIGHTS RESERVED

receiver units are alternated between the normal and the standby units every 5 seconds. When continuity is again established, the transmitter-receiver in use at that time will continue to be used.

APPLICATION

The system is now in test operation on the L & N Railroad and present operation is satisfactory. The first tests with the system used a 3 watt transmitter adapted from our Duophone radio. With this power, however, there were too many locations in which communication was lost between the lead and the remote units. A RF power amplifier was designed for us by Melpar and the system is now operating with good continuity using these amplifiers.

The L & N is presently using this first system to determine its proper application on their railroad, and they are training enginemen in its operation. This system has improved operations on trains which contain up to 300 cars.

US&S DIV. WABCO - SWISSVALE, PA. ALL RIGHTS RESERVED

PRINCIPLES OF RAILROAD OPERATION AND RAILWAY SIGNALING

CHAPTER XXI

REGULATORY BODIES AND TRADE ASSOCIATIONS

REGULATORY BODIES

Interstate Commerce Commission

The Interstate Commerce Commission is authorized by Federal Law to exercise regulatory powers over railroad, highway, pipeline and waterway transportation. The regulations which are of specific interest to WABCO and U.S.& S. are primarily in the field of Safety and Service.

The Commission has jurisdiction over all interstate commerce with respect to train braking and the installation, maintenance, testing and operation of signal apparatus, including the establishment of adequate braking distance through proper signaling spacing or additional indications. The I.C.C. has also established (by specific order 29543) the maximum train speeds permissible, as follows:

> 59 miles per hour for passenger trains and 49 miles per hour for freight trains in Timetable - Train Order territory without block signals.
>
> 79 miles per hour for passenger and freight trains with block signal protection, either automatic or manual block.
>
> Where speeds of 80 miles per hour or more prevail, train control (intermittent or continuous), or cab signals, is required.

The I.C.C. Bureau of Safety has, through the issuance of its "Rules, Standards and Instructions", established certain minimum requirements for the installation, inspection, maintenance and repair of various signal systems, which must be followed by all railroads operating in interstate business. The current "RS&I" dated March 31, 1966 was just issued.

The I.C.C. also has jurisdiction over "Hours of Service" for employees directing or operating trains - 16 hours for train and engineer service employees, 9 hours for dispatchers and telegraph operators in continuous and two trick stations and 13 hours for single trick offices.

The I.C.C. also investigates and prepares written reports covering railroad accidents where reportable injuries occur (loss

 ALL RIGHTS RESERVED

of three of more days' time resulting from the accident) or severe damage results. As a result of such accident investigations, it may recommend or even order certain changes to operating procedures, installation of signal systems, etc., to prevent recurrence.

State Public Service Commissions

The various States through their Public Service or Railroad Commissions assume jurisdiction over railroads not engaged in interstate commerce (and there are very few) as well as requiring conformance to established standards for highway crossing protection -- and frequently issue orders requiring such protection. The State bodies usually participate in accident investigations along with the I.C.C. on more or less political basis.

Some State bodies are quite inactive, while others such as Michigan and California are extremely aggressive in their demands to protect the public from injury or death due to accidents involving trains.

In Pennsylvania, this regulatory group is called the "Pennsylvania Public Utilities Commission".

TRADE ASSOCIATIONS

Association of American Railroads

Organization and Activities

The Association of American Railroads, formed in 1934, is the organization of the principal railroads of the United States, Canada and Mexico, for dealing with matters of common concern in the whole field of railroading: operations, maintenance, engineering, research, traffic, purchases and stores, accounting and finance, valuation, taxation, law and legislation, transportation economics, and relations with the public.

The Association is the "lineal descendant" of such earlier organizations as the Master Car Builders' Association, formed in 1867, which established the standardization of freight cars, thus making possible their free movement from railroad to railroad throughout the country; the Time Conventions, formed in 1872, and the General Time Convention of Railway Managers which pioneered the system of standard time by which the nation now lives; and the Railway Accounting Officers Association, formed in 1888, which helped develop uniform railroad accounting.

These and numerous other organizations of railroad men working together for the better performance of the railroads' job of transportation are now parts of the Association of American Railroads, which was created by the merger in October, 1934, of the

US&S DIV. WABCO - SWISSVALE, PA. ALL RIGHTS RESERVED

American Railway Association, the Association of Railway Executives, the Railway Accounting Officers Association, the Railway Treasury Officers Association, the Bureau of Railway Economics, and other organizations.

Almost every phase of railroading is touched by the work of the Association of American Railroads. For example, in the one field of the movement of freight between two or more railroads, the Association, through its appropriate divisions and among other related activities, has set up and maintains the standards which make equipment available for wide interchange; directs the daily flow of freight cars, loaded and empty, from railroad to railroad, and marshals fleets of various types of cars to meet sudden or peak demands; establishes and maintains the basis on which cars away from "home" are repaired and on which such repairs are paid for; and arranges rules for the remittance to each railroad of its proper share of the revenue collected.

Most of the mechanical, engineering, and other technical research of the Association is carried on through more than 200 standing committees and permanent research staffs. A few typical examples of the numerous subjects covered are: roadbed and track maintenance, continous-welded rail, signals, automatic train control, radio and radar, wheels and axles, couplers and draft gears, use of alloys for lightweight car equipment, freight containers, conservation of fuel and materials, fire prevention, lighting improvement, development and application of special business machines, use of microphotography, and improvement and speeding up of accounting procedures.

Much research work is done in conjunction with universities, technological institutions, industrial research laboratories and the laboratories of the companies which supply the railroads with materials and equipment. A Research Center built by the Association of American Railroads is located on the campus of the Illinois Institute of Technology in Chicago.

The railroads of the United States, Canada and Mexico which are members of the Association represent 96 per cent of the mileage in these countries, and 97 per cent of the business handled by railroads. Numerous other railroads in North America and all over the world are associate members, receiving the benefit of the reports of the Association's various activities.

The Member Roads of the Association elect annually a Board of Directors consisting of twenty railroad chief executive officers. The president of the Association is ex-officio Chairman of the Board. Headquarters of the Association are in the Transportation Building, Washington 6, D.C.

Departments, Divisions, and Sections

Among the many segments of this organization are these that

US&S DIV. WABCO - SWISSVALE, PA. ALL RIGHTS RESERVED

have a direct effect on the business of Union Switch & Signal Division:

Operations and Maintenance Department - headed by a permanent vice president under whose direction the Communications and Signal Section operates. The C&S Section, which is headed by a chairman (elected for one year) and a Committee of Direction composed of communication and signal officers representing member railroads. The section is responsible for establishing and maintaining standards for the design, installation, operation and maintenance of all communication and signal facilities.

It is the C&S Section where a sizeable amount of time and effort is expended by various individuals in engineering, marketing and executive departments of US&S division. We have engineering representatives assigned to all committees whose subject matter is of interest to us. Their purpose is to provide technical assistance to the railroad committee members in connection with their various assignments.

Currently, the standing committees are:

Committee	
1	Wire and Cable Lines
2	Practices and Operation
3	Electronics
4	Radio
5	Instructions and Shop Practice
6	Designs
7	Inside Plant
8	Highway Grade Crossing Protection
9	Transmission
10	Interlocking, Traffic Control and Block Signaling

Special Committees include:

Research Assignments
Editing
Education and Training of Employees
Railroad - Commercial Communications Liaison
Commercial
Nationwide Railroad Communications Network

Three regularly scheduled membership meetings are held each year. The primary one being the 3-day annual meeting held in a location selected by that year's chairman. Two sectional (east and west) one-day meetings are also held each year, devoted entirely to technical papers.

US&S is usually represented at all three meetings with the presentation of a technical paper.

US&S DIV. WABCO - SWISSVALE, PA. ALL RIGHTS RESERVED

Shortly before each annual meeting, a copy of the "Advance Reports" for that meeting is distributed to all members. Following the annual meeting, a copy of that meeting's "Proceedings" is also issued.

The C&S Section also prepares and issues a "Signal Manual", a "Communications Manual" and "Typical Circuits Representing Current Practice for Railway Signaling" which set forth recommended practices in their respective fields.

Up-to-date copies of these are maintained in the US&S library. The two manuals are quite important because of their frequent reference in contracts and work specifications issued by our customers.

The administrative staff of the C&S Section is located in Chicago and is headed by a Secretary. Most committee meetings are held in his office.

Also operating under the direction of the Vice President - Operations and Maintenance is the Train Operation, Control and Signals Committee.

Within the framework of Train Operation, Control and Signals are units dealing with grade crossing protection, track car protection, and rules, standards and instructions pertinent to the Signal Inspection Act of the Interstate Commerce Act. TOC&S serves as the medium of contact between the railroads and the Interstate Commerce Commission in matters relating to the Signal Inspection Act, and other activities include the compilation and distribution of reports on automatic train control and cab signal installations in the United States, and the investigation of new devices and methods intended to increase safety of train operation.

The grade crossing activities of Train Operation, Control and Signals include the investigation of various types of railroad-highway grade crossing devices, and cooperation with federal, state and other public authorities concerned with the protection of crossings.

The Data Systems Division is a newly created division whose objectives are (a) to encourage and facilitate the interchange of information systems and data processing ideas, practices and experiences of all departments of Member Roads for the benefit of the railroad industry, (b) to stimulate the development and application of data processing and information techniques and procedures which will promote their efficient and productive use, and simplify the interchange of data between carriers, and (c) to provide an organization for prompt consideration and resolution of problems within the scope of the Division that require concerted action by the railroads.

US&S DIV. WABCO - SWISSVALE, PA. ALL RIGHTS RESERVED

In addition to the General Committee which is responsible for overall operation of the division, the following Permanent Committees have certain specific responsibilities:

1. Committee on Applications and Systems Development

This committee will:

(a) Define management problems for which data systems can be useful.

(b) Exchange and disseminate information on problems which have been solved and methods used to solve them.

(c) Define the information requirements of management problems which have not been solved.

(d) Develop specifications and broad design of information systems for solution of management problems.

2. Committee on Interroad Procedures and Data Exchange

This committee will:

(a) Seek and develop specific solutions to data systems problems of the industry.

(b) Develop procedures and formats required for interchange of information between roads and for reports to outside agencies.

(c) Exchange and develop clerical work simplification ideas.

3. Committee on Data Systems Equipment

This committee will concern itself with:

(a) Equipment developments and systems configurations.

(b) Problems of capturing and validating source data in a form suitable for introduction into a data system.

(c) Transmission, processing, and presentation of data.

(d) Investigation of techniques and equipment in use of proposed for the future which might be applied within the railroad industry.

US&S DIV. WABCO - SWISSVALE, PA. ALL RIGHTS RESERVED

4. Committee on Data Systems Administrative Problems

This Committee will consider:

(a) Training of data systems users.

(b) Organization plans for data systems activities.

(c) Management problems for measuring and controlling data systems activities.

(d) Administration of the operation of data systems.

(e) Problems of interdepartmental coordination in planning and operation of total data systems.

5. Committee on Programming Techniques

This Committee will consider:

(a) Development of an index of programming routines and libraries.

(b) Review of new languages for application in the railroad industry.

(c) Programming language standardization

(d) Development of programming and documentation standards for use throughout the industry.

6. Administrative Committee

This Committee will:

(a) Coordinate Division activities.

(b) Implement the policy decisions of the General Committee through the present organizational structure.

Emphasis is placed upon the desirability of providing for "customer" involvement throughout the activities of the Data Systems Division. Emphasis is also given to the need for flexibility of structure, because the Division is concerned with an evolving technology. When required, ad hoc committees are established to handle special studies and assignments which may come to the attention of the General Committee either from within or outside of the Data Systems Division.

The Research Department is headed by a Vice President and is responsible for collaboration with all other departments and committees of the AAR as it primarily concerns materials research and

US&S DIV. WABCO - SWISSVALE, PA. ALL RIGHTS RESERVED

testing.

Other segments with which US&S Division comes in contact on a less frequent basis are:

Engineering Division - for activities related to rail, track, tie, roadway, ballast and structural research. Also referred to as the American Railway Engineering Association (AREA). US&S has technical representation on two committees - "Yards & Terminals" and"Economics of Railway Location and Operation".

Mechanical Division - for activities related to the hot box problem, freight car truck conditions, draft gears, brake equipment (of primary interest to the Westinghouse Air Brake Division), wheels, axles and lubricators and other areas of mechanical research.

Purchases and Stores Division - for activities related to the purchase, inspection, storage and distribution of the many items of our manufacture which are bought by the railroads. It is this group that has been attempting to simplify and standardize the stocks of supplies and equipment used by the railroads.

Public Relations Department - for activities involved in keeping the public and political forces informed on railroad activities through issuance of news stories, feature articles, reference books, motion pictures and advertising.

The Railway Systems and Management Association (RSMA) has as its objectives:

1. To serve the Railroad Industry.
2. To assist in the improvement of the Railroad image.
3. To promote the most effective use of the Railroad plant.
4. To encourage cooperative interdepartmental action within Railroads.
5. To provide a forum for the interchange of information.
6. To disseminate information of interest to all persons concerned with Rail transport.
7. To provide continuing instruction in the field of Railroad management education.
8. To promote and cooperate in basic administrative systems research.
9. To foster the study of the relationship of Railroads to other transport systems.

US&S DIV. WABCO - SWISSVALE, PA. ALL RIGHTS RESERVED

Other organizations and associations include many regional, local and specialized groups such as:

1. American Short Line Railroad Association
2. American Association of Railroad Superintendents
3. Association of Western Railways
4. Combined Railway Suppliers
5. Eastern Railroad Presidents Conference
6. Railway Club of Pittsburgh (a typical local club)
7. Railway Signal and Communications Suppliers Association

US&S DIV. WABCO - SWISSVALE, PA. ALL RIGHTS RESERVED

The Railway Progress Institute

is a voluntary association of the nation's leading manufacturers of railway equipment and supplies, dedicated to promoting the welfare of America's railroads and the suppliers who serve them. Employing 500,000 men and women in the United States and Canada, the railway supply industry provides approximately three billion dollars worth of supplies for railroads every year.

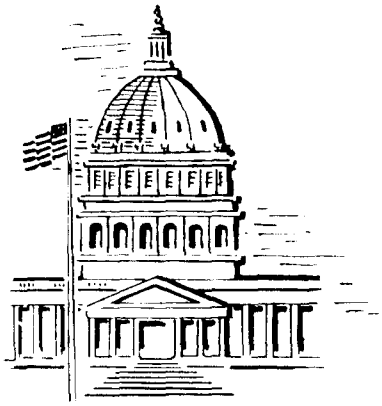

IN GOVERNMENT TO AID OUR INDUSTRIES the RPI is the united voice of the railway supply industry, promoting the welfare of the railroads at the local, state and federal level. RPI spokesmen testify before scores of Congressional committees, soliciting Congressional support on matters of vital interest to the railroads. RPI staff officers are registered under federal statutes, to be able to present railroad points of view to both legislative and executive branches of the federal government.

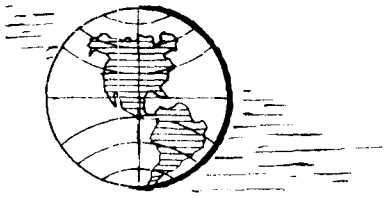

WITH FRIENDLY NATIONS across the seas and in the Americas, the Institute works to bring the advantages of U. S. railroad technology to free peoples throughout the world. In this program, we work closely with the proper agencies of our federal government. Education through visitation for foreign railroad officials . . . a library of foreign railroad specifications . . . and informative literature for commercial attachés and representation at transportation meetings around the globe all are elements of this important program.

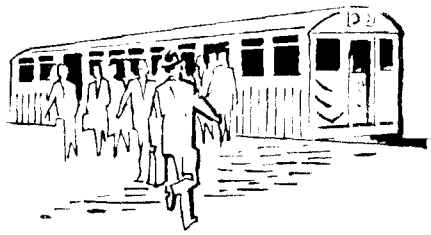

FOR OUR EXPANDING POPULATION the RPI works closely with railroads and transit authorities to develop balanced transportation systems. Through public information programs, opinion molders, transportation officials and lawmakers are kept abreast of the latest "state of the art." RPI member companies are working constantly with transportation and government officials on national transportation programs, such as the "Northeast Corridor Project" . . .

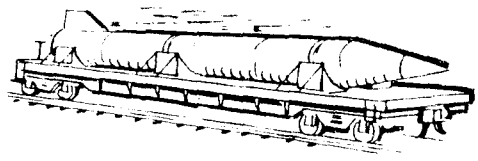

TO HELP DEFEND OUR NATION RPI has set up the necessary machinery to act as an assembled body with appropriate agencies of the federal government in case of a national emergency. In any emergency which might endanger our nation, the railway supply industry must be ready to produce the equipment necessary to keep our vital transportation system, the railroads, in efficient operation. During war situations, the RPI is especially alert to the possible effects of government controls or allocations.

TOGETHER WITH OUR FRIENDS the officials of the railroads we serve, member company representatives meet once a year for an evening of fellowship, commemorating a year of teamwork between our two interdependent industries. At this gala event, the RPI Annual Dinner, the coveted Golden Freight Car Award is presented to the railroad which has carried on the best freight traffic promotion during the year.

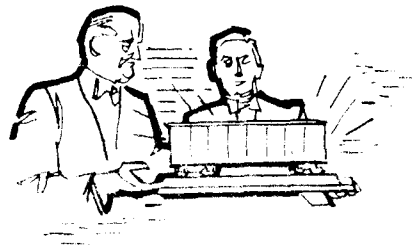

IN A CHANGING BUSINESS COMMUNITY consolidations and acquisitions are becoming more and more common. So it is with our nation's railroads. Many of the major carriers are currently involved in merger proposals or have recently merged. These consolidations often result in major changes in the corporations that supply the railroads. For this reason, the RPI continuously reports on pending mergers of interest to suppliers. Studies of consummated mergers and their effect on our industry are also made.

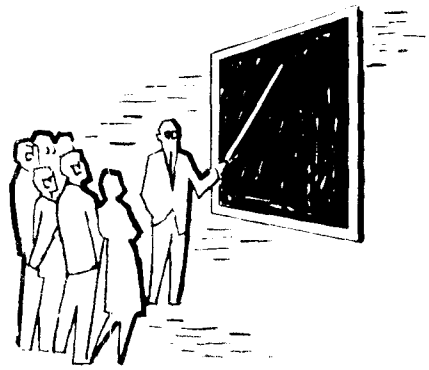

IN THE CLASSROOM member company representatives learn the latest techniques in presenting their products to railroads and in solving the problems of management. The Railroad Sales Development Seminar is open to sales personnel, novice and veteran alike. The Railroad Management Seminar, for members' management personnel, teaches up-to-date methods of working with people, particularly related to the railway supply industry.

TO KEEP INFORMED is of great importance to members of the RPI. We serve as a clearing house for information as to railroad activities as well as railway supply activities. This information is distributed to nearly 1,500 member company representatives, who receive regularly:

1. The RPI Report—a weekly digest of events in railroad, railway supply and government circles.
2. The Railway Supplier—a monthly review of RPI activities.
3. Special bulletins and reports from the RPI staff. Typical subjects are White House briefings, Congressional hearings, and governmental developments in such fields as strategic material supply and taxation.
4. Finally, the RPI serves as a basic source of information on the railway supply industry for member companies, transportation officials, students, researchers and others interested in our industry so vital to the nation.

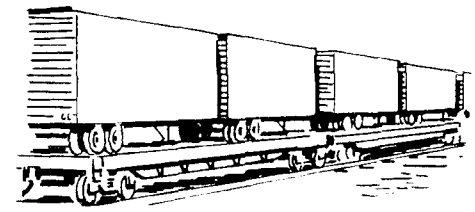

THE MOVEMENT OF COMMERCE to feed, clothe, house and satisfy other needs of our growing world demands newer and better means of handling freight. Since nearly half of our gross national product moves on rails, such innovations as piggybacking and containerization are of vital interest. The Institute watches the development of these freight handling systems on railroads, as well as their potential in interchange with other transportation modes for shipment abroad.

How Railroad Presidents See Us

"The Railway Progress Institute is a staunch ally of the railroad industry and over the years has performed invaluable service for railroads in many ways. Among these are representations before Congressional committees and other government agencies on matters of mutual interest, the conduct of studies and preparation of reports bearing on the railroads' future and assistance in creating greater public appreciation and understanding of railroads and their vital role in the nation's economy. In addition, RPI is the central organization through which railway supply companies can focus on common problems and bring more forcefully to bear their full support of activities undertaken in the common good.

s D. W. Brosnan
4 29 66 *President*
Southern Railway System"

"The Railway Progress Institute is of great benefit to American railroads. The Institute supports railroad programs and objectives that are being considered by Congress and the railroads' dealings with various Federal agents. It serves also as a focal point for railroad suppliers in pointing up methods to better serve railroad customers.

s Herman H. Pevler
6 21 66 *President*
Norfolk and Western Railway Company"

"The Railway Progress Institute can be proud of its contribution to the renewed strength and vigor of America's railroads. Through RPI's active encouragement of the industry's marketing efforts; its constant support of technical research; its championing of new equipment and services; and its articulation of the need for a modern transportation policy, it is helping the railroads to better fulfill their vital role in the nation's economic and industrial life.

s Alfred E. Perlman
5 3 66 *President*
New York Central System"

RPI

THE NATIONAL
ASSOCIATION OF
THE RAILWAY EQUIPMENT
AND SUPPLY INDUSTRY

"Since the days when the Railway Progress Institute came forward with very helpful and constructive testimony in the Smathers Committee hearings of 1958, I have held a high appraisal of the value to the railroads of the RPI and its worthy objectives. Certainly the railroads found the RPI to be of extreme value in connection with repeal of full crew law provisions in the States of Arizona and California where the wholehearted support and very active participation of RPI in a campaign for enlightenment of the public produced an overwhelming vote against the State full crew laws at the polls in November, 1964. The Railway Progress Institute played a vital part in bringing about this result, which has been beneficial to not only the railroads operating in those states, but to the whole rail industry because the favorable vote demonstrated conclusively that where the people have a chance to express their true convictions, they are opposed to political continuance of laws requiring unneeded employment.

"We appreciate greatly what the Railway Progress Institute stands for and is doing to help the Nation's railroads

s E. S. Marsh
5 22 66 *President*
The Atchison, Topeka and
Santa Fe Railway System"